Jacobs®

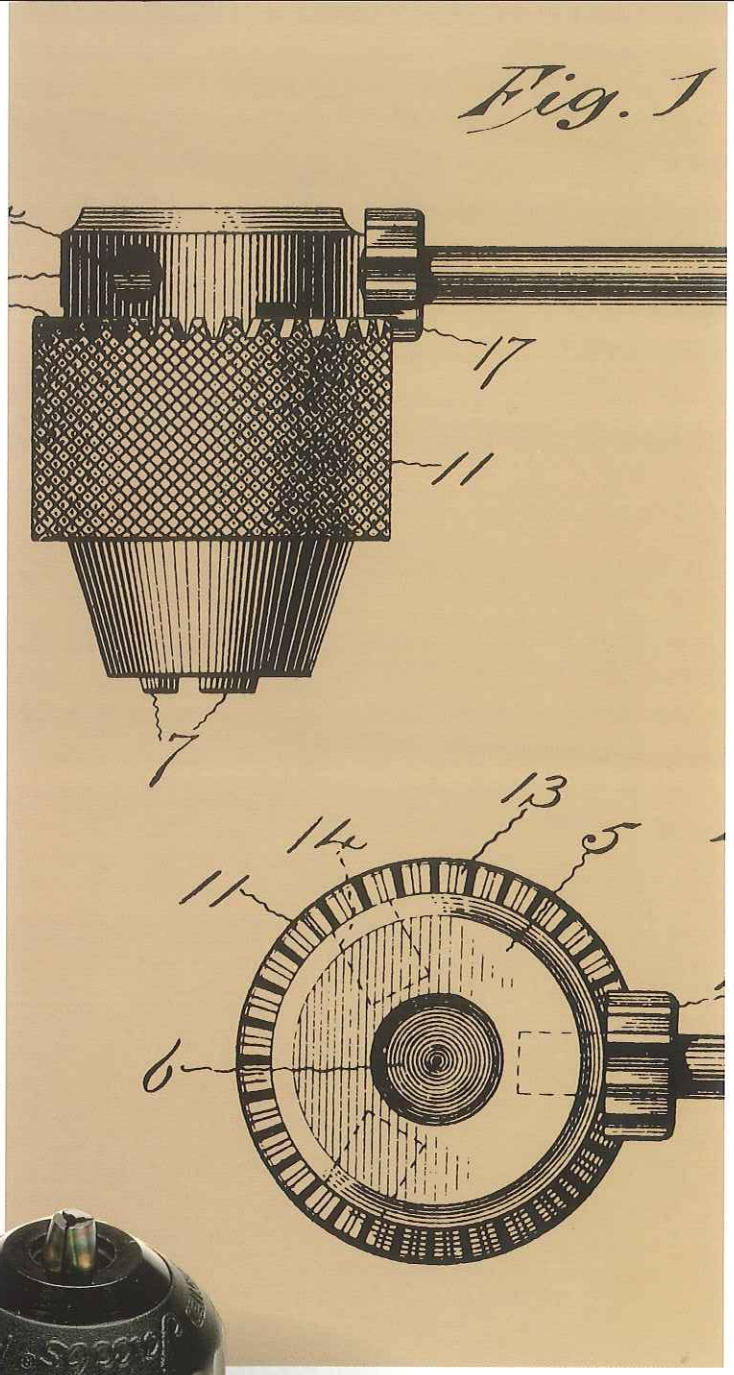

Industrial Products Catalog

Jacobs®

It's hard to believe that a set of bruised knuckles was the impetus for one of the most significant industrial advancements in the 20th century.

Arthur Irving Jacobs was never one for leaving things alone. He was always improving them—continually coming up with new ways of working and new gadgets to do the work. Before he was 30, "A.I.," as he was known, had perfected a new bookbinder, a new method for making bicycle spokes and chains, plus many other manufacturing advancements.

On one particular occasion, he was working with an old style drill press, trying to hold the belt control with one hand, and applying a spanner wrench to the chuck with the other. The wrench slipped and he badly battered his knuckles. A.I. knew there had to be a better way. In a matter of days, he had developed the first drill chuck with a toothed sleeve and key. A few months later, he founded what would become The Jacobs® Chuck Manufacturing Company. The rest, as they say, is history.

The keyed chuck helped to transform the production process just at the time when industrial manufacturing was about to experience its most significant growth in modern times. Today, the concept of the

Contents

original keyed chuck is an integral part of all drill chuck technology.

It has been applied to a wide range of applications, from the most sophisticated CNC machining to drilling with the smallest cordless portable power drill.

Now a part of the Danaher Corporation family of companies, The Jacobs® Chuck Manufacturing Company maintains a global presence as a recognized leader in the design and manufacture of precision tool and work holding devices for stationary equipment and portable power tools.

Finding a better way through world-class innovation and world-class partnerships—that's the driving force behind our business. It's a tradition that began with A.I. Jacobs almost a century ago when he set up his first network of distributors for the toothed sleeve and keyed drill chuck. It's a tradition we will carry forward with you.

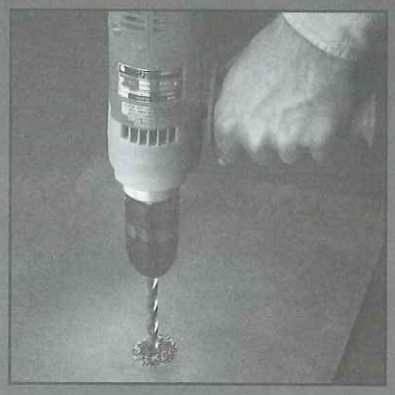

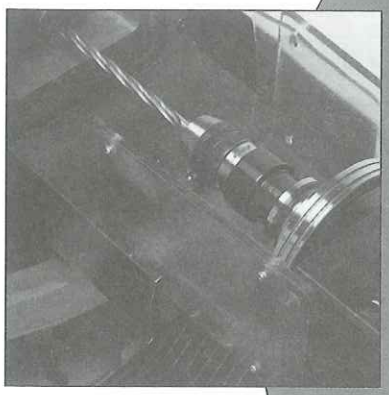

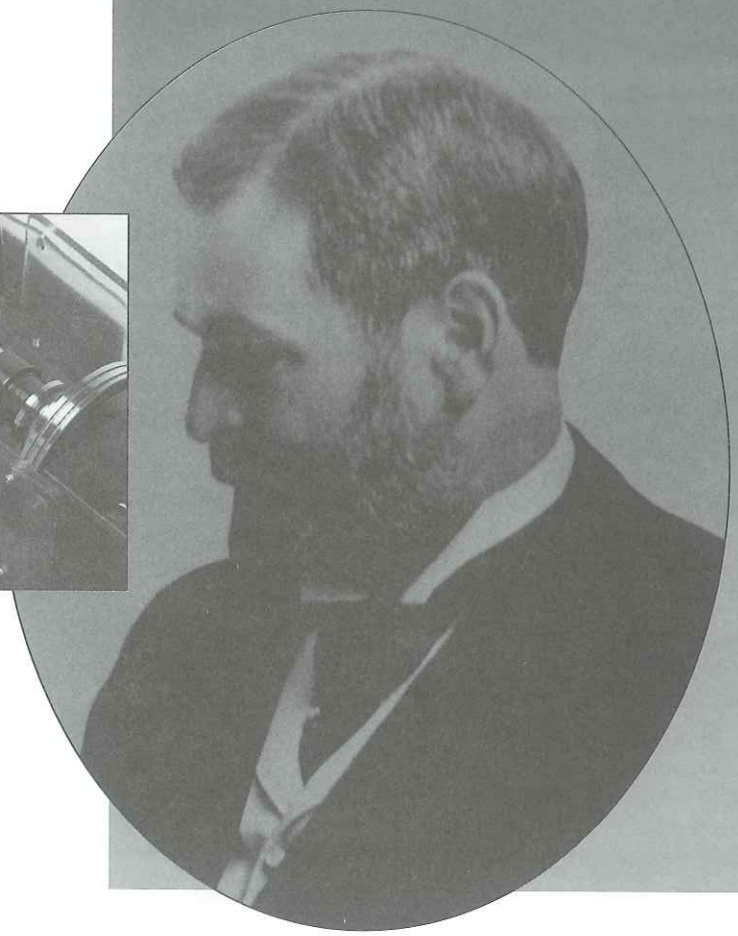

"There must be a better way to build a chuck."

–A.I. JACOBS, 1902

PRODUCT INDEX

PRODUCT INDEX (continued)

NOMENCLATURE

Chucks and Keys

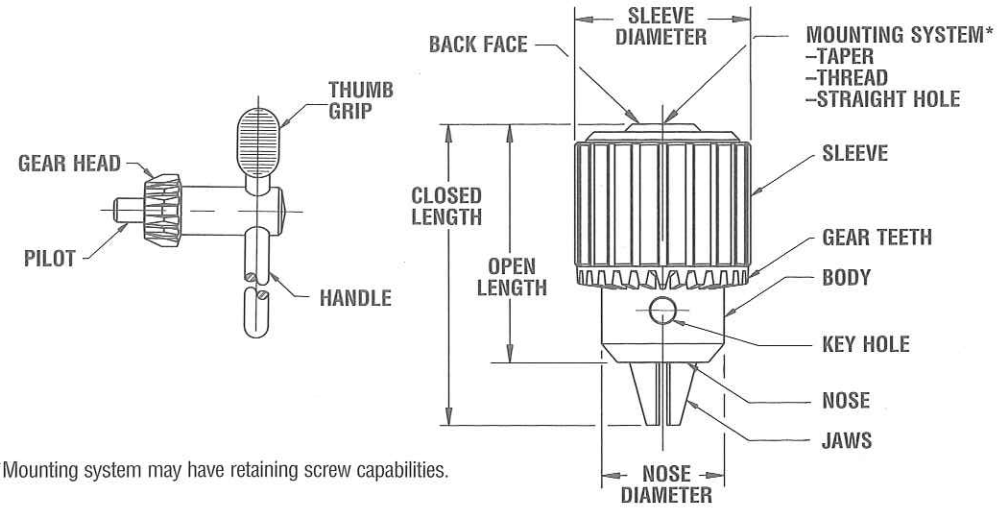

*Mounting system may have retaining screw capabilities.

Toolholders

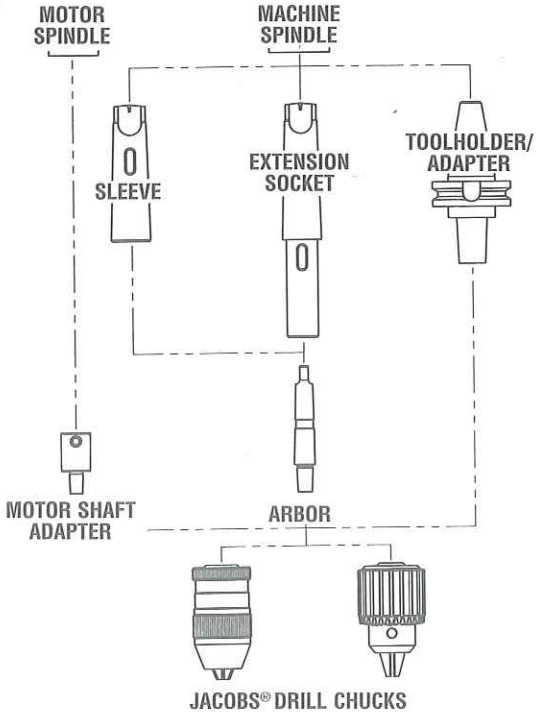

TOOL AND WORK HOLDER DEFINITIONS

Arbor: Chuck mounting device used to adapt standardized chuck mounts to various machine spindle tapers. Arbors are also used to adapt mounts to other rotating devices such as machine spindles and lathes.

Sleeve: Adapter for arbors when the machine spindle requires a larger taper than is available on the arbor.

Extension Socket: Adapting device which increases effective spindle length and provides more flexibility when adapting to various taper sizes.

Centers: Support device for a workpiece when unusually long items or extreme accuracy are important. Available generally as rotating ("live") and stationary ("dead") designs.

Chuck and Accessory Removal Tools

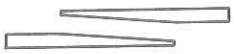

WEDGES
(Two Required)

DRIFT

REMOVAL TOOL DEFINITIONS

Ejecting Drift: Hardened steel accessory used to disassemble self-holding taper components.

Wedges: Tapered steel plates used in pairs to disassemble chucks from arbors and spindles.

Jacobs®

FOR A BETTER GRIP ON PRECISION®

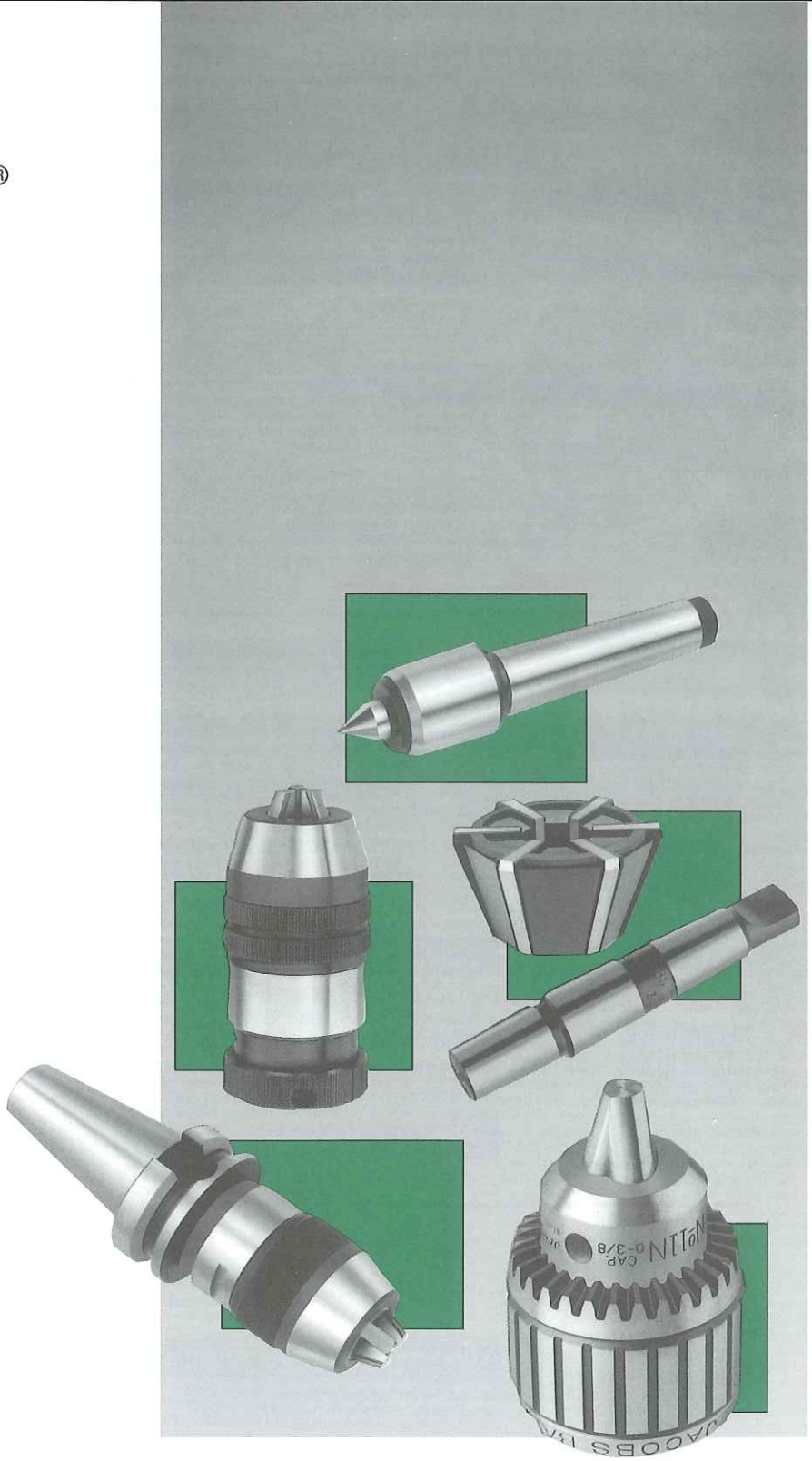

INDUSTRIAL TOOLHOLDERS

Keyed Chucks
Keyless Chucks
Toolholder/Adapters
Tap Chucks
Die Grinder Chucks
Rubber-Flex® Collets
Arbors
Drill Sleeves
Extension Sockets
Turret Sockets
Ejecting Drifts
Rotating Centers
Stationary Centers

INDUSTRIAL TOOLHOLDERS

Jacobs®

BALL BEARING CHUCKS

Super Chuck® Ball Bearing Chucks are designed for close tolerance production drilling on precision equipment.

The Jacobs® Super Chuck® Ball Bearing Chuck is specifically engineered for heavy-duty, close tolerance production drilling. It is adaptable to a wide range of production drilling equipment, jig borers, milling machines, lathes and radials. Utilizing a ball thrust bearing to reduce friction in the chuck closing mechanism, it permits the application of more gripping force on drill shanks to maximize drilling torque under the most demanding machining conditions.

Features

- Ball bearing construction maximizes gripping force and drilling accuracy.
- Jaws center-ground for absolute straightness and alignment.
- Jaws specially treated to ensure extended thread life and high gripping surface hardness.
- One-piece sleeve eliminates crack between driving teeth often found in other designs.
- Through-hardened sleeve teeth plus hardened nose and keyholes provide outstanding wear resistance.
- Fluted sleeve standard.
- Each chuck 100% inspected for performance and precision.

Chucks

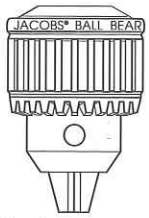

Chuck

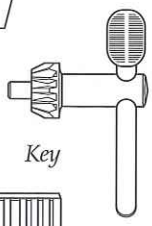

Key

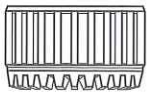

Sleeve

Thrust Race & Balls

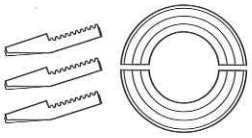

*Jaw & Nut Unit**

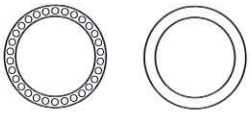

*Caged Bearing and Thrust Washer**

Model No.	Part No.	Capacity Range Minimum in	Minimum mm	Maximum in	Maximum mm	Mount Jacobs	Key No.	Dimensions Closed Length in	Closed Length mm	Open Length in	Open Length mm	Sleeve Dia. in	Sleeve Dia. mm	Weight Ea. oz
8-1/2N	30209	0(1)	0	0.250	6.4	2JT	K30	2.41	61.2	1.95	49.5	1.56	39.7	10
11N	30215	0(1)	0	0.375	10.0	2JT	K32	2.88	73.2	2.26	57.4	1.93	49.1	19
14N	30221	0(1)	0	0.500	13.0	3JT	K3	3.88	98.6	2.97	75.4	2.44	62.1	38
16N	30227	0.125	3	0.625	16.0	3JT	K4	4.31	109.5	3.26	82.8	2.63	66.9	47
18N	30233	0.125	3	0.750	19.0	4JT	K4	5.12	130.0	3.95	100.3	3.01	76.4	66
20N	30239	0.375	10	1.000	25.4	5JT	K5	5.50	139.7	4.23	107.4	3.65	92.6	100

(1) At minimum capacity will hold a No. 60 (0.040in /1mm) drill.

Replacement Parts (older models)

For the older models which do not incorporate the service kit marking on the chuck nose, service parts are still available as listed in the chart below.

Chuck Model No.	Key Model No.	Key Part No.	Jaws and Nut Unit No.	Sleeve Model No.	Sleeve Part No.	Thrust Race and Balls Part No.
8-1/2N	K30	3664	7430	S8-1/2N	5089	7436
11N	K32	3666	7431	S11N	5097	7437
14N	K3	3651	7432	S14N	5506	7438
16N	K4	3655	7433	S16N	5514	7439
18N	K4	3655	7434	S18N	5522	7440
20N	K5	3657	7435	S20N	5530	7441

Service Kits (newer models)

There have been improvements incorporated in the Jacobs® Super Chuck® Ball Bearing Chuck. These necessitate a change in the service components. For the newer chucks which call out a service kit number on the chuck nose, this kit will include: jaws, nut, caged bearing and thrust washer.

Chuck Model No.	Chuck Part No.	Service Kit No.*	Key Model No.	Key Part No.	Sleeve Model No.	Sleeve Part No.
8-1/2N	30209	30343	K30	3664	S8-1/2N	5089
11N	30215	30344	K32	3666	S11N	5097
14N	30221	30345	K3	3651	S14N	5506
16N	30227	30346	K4	3655	S16N	5514
18N	30233	30347	K4	3655	S18N	5522
20N	30239	30348	K5	3657	S20N	5530

*All Super Chuck® Ball Bearing Chuck service kits include jaws, nut, caged bearing and thrust washer.

*** Included in service kits for newer models.**

PLAIN BEARING CHUCKS

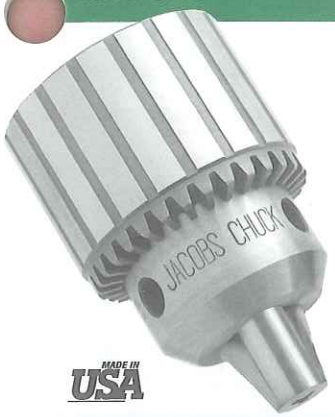

The O.E.M. standard for accuracy and durability on all types of industrial power and machine tools.

The Jacobs® Plain Bearing Chuck is the world's most widely used for medium or heavy-duty portable, bench or floor mounted power tools. This industrial quality chuck, with fully hardened and ground working components, offers exceptionally high accuracy, gripping power and durability. Both heavy and medium duty models are available in a wide range of capacities for use on threaded and taper mounted spindles.

Features

- Heavy and Medium Duty models for threaded or taper mounting.
- Jaws center-ground for absolute straightness and alignment.
- Jaws specially treated to ensure extended thread life and high gripping surface hardness.
- One-piece sleeve eliminates crack between driving teeth often found in other designs.
- Through-hardened sleeve teeth, plus hardened nose and keyholes provide outstanding wear resistance.
- Each chuck 100% inspected for performance and precision.

Taper Mounted

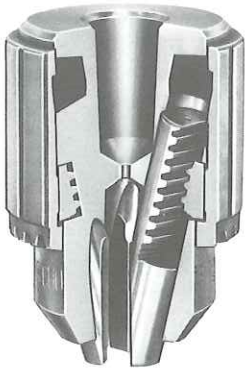

Heavy Duty Model

- Fluted sleeve standard except Model 34-33C, which is smooth and ground.

Model No.	Part No.	Capacity Range Minimum in	Capacity Range Minimum mm	Capacity Range Maximum in	Capacity Range Maximum mm	Mount Jacobs	Key No.	Dimensions Closed Length in	Closed Length mm	Open Length in	Open Length mm	Sleeve Dia. in	Sleeve Dia. mm	Weight Ea. oz
3A	6223	0.125	3	0.625	16.0	3 JT	K3	3.81	96.8	2.87	72.9	2.30	58.4	32
3KD(2)	6228	0.125	3	0.625	16.0	3 JT	K3	4.06	103.1	3.12	79.2	2.29	58.2	33
3PD(3)	6230	0.125	3	0.625	16.0	3 JT	K3	4.06	103.1	3.12	79.2	2.29	58.2	33
34-02	14442	0(1)	1	0.500	13.0	2 JT	K3	3.52	89.4	2.74	69.6	2.04	51.8	23
34-06	6295	0(1)	1	0.500	13.0	6 JT	K3	3.52	89.4	2.74	69.6	2.04	51.8	24
34-33	14445	0(1)	1	0.500	13.0	33 JT	K3	3.52	89.4	2.74	69.6	2.04	51.8	23
34-33C(4)	14451	0(1)	1	0.500	13.0	33 JT	K3C	3.71	94.2	2.93	74.4	2.00	50.8	26
36	6309	0.180	0	0.800	20.3	3 JT	K4	4.06	103.1	3.14	79.8	2.54	64.5	45
36KD(2)	14865	0.180	5	0.800	20.3	3 JT	K4	4.25	108.0	3.42	86.9	2.54	64.5	44
36PD(3)	14866	0.180	5	0.800	20.3	3 JT	K4	4.25	108.0	3.42	86.9	2.54	64.5	45

(1) At minimum capacity will hold a No. 60 (0.040in /1mm) drill.
(2) Equipped with positive drive slot.
(3) Equipped with pin-type positive drive.
(4) Equipped with locking collar - 1-1/16-20 thread.

Medium Duty Model

- Fluted sleeve standard except Models 0 and 1A, which are smooth and ground.
- All Series 33 Plain Bearing Chucks are hammer capable.

Model No.	Part No.	Capacity Range Minimum in	Capacity Range Minimum mm	Capacity Range Maximum in	Capacity Range Maximum mm	Mount Jacobs	Key No.	Dimensions Closed Length in	Closed Length mm	Open Length in	Open Length mm	Sleeve Dia. in	Sleeve Dia. mm	Weight Ea. oz
0	6200	0(2)	0	0.156	4.0	0 JT	K0	1.450	36.8	1.100	27.9	0.850	21.6	2
1A	6206	0(1)	1	0.250	6.5	1 JT	K1	1.920	48.8	1.540	39.1	1.180	30.0	5
2A	6214	0(1)	1	0.375	10.0	2 JT	K2	2.810	71.4	2.170	55.1	1.670	42.4	13
31-01	14697	0(1)	1	0.375	10.0	1 JT	K30	2.490	63.2	2.010	51.1	1.420	36.1	8
31-02	14698	0(1)	1	0.375	10.0	2 JT	K30	2.490	63.2	2.010	51.1	1.420	36.1	8
33	6279	0.08	2	0.500	13.0	33 JT	K32	3.210	81.5	2.520	64.0	1.792	45.5	16
3326A	6291	0.08	2	0.500	13.0	.6250	K32	3.540	89.9	2.850	72.4	1.792	45.5	18
33KD(3)	6281	0.08	2	0.500	13.0	33 JT	K32	3.460	87.9	2.770	70.4	1.792	46.0	17

(1) At minimum capacity will hold a No. 60 (0.040in /1mm) drill.
(2) Model 0 has a minimum capacity of a No. 80 (.0135in /.344mm) drill.
(3) Equipped with positive drive slot.

INDUSTRIAL TOOLHOLDERS

Jacobs®

PLAIN BEARING CHUCKS (continued)

Thread Mounted

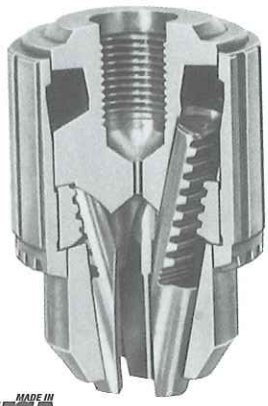

MADE IN USA

Heavy Duty Model

- Fluted sleeve standard on all models.

Model No.	Part No.	Capacity Range Minimum in	Capacity Range Minimum mm	Capacity Range Maximum in	Capacity Range Maximum mm	Mount Thread	Key No.	Dimensions Closed Length in	Dimensions Closed Length mm	Dimensions Open Length in	Dimensions Open Length mm	Dimensions Sleeve Dia. in	Dimensions Sleeve Dia. mm	Weight Ea. oz
3B 5/8	6232	0.125	3	0.625	16.0	5/8-16	K3	3.81	97	2.84	72	2.29	58	32
7BA 3/8	6255	0(1)	1	0.250	6.5	3/8-24	K7	2.23	57	1.74	44	1.33	34	7
32BA 1/2	8859	0(1)	1	0.375	10.0	1/2-20	K32	3.05	77	2.31	59	1.79	45	14
35B 1/2	14723	0.156	4	0.625	16.0	1/2-20	K3	3.52	89	2.74	70	2.04	52	25
36B 3/4	6316	0.188	5	0.800	20.3	3/4-16	K4	4.12	105	3.20	81	2.54	65	46
36B 5/8	6314	0.188	5	0.800	20.3	5/8-16	K4	4.12	105	3.20	81	2.54	65	46

(1) At minimum capacity will hold a No. 60 (0.040in /1mm) drill.

Medium Duty Model

- Fluted sleeve standard except Models OB 5/16, 1B 3/8, 1B 3/8 AD, and 41BA 3/8–S, which are smooth and ground.
- New improved 41 Series Chucks replace 31 Series Chucks.

Model No.	Part No.	Capacity Range Minimum in	Capacity Range Minimum mm	Capacity Range Maximum in	Capacity Range Maximum mm	Mount Thread	Key No.	Dimensions Closed Length in	Dimensions Closed Length mm	Dimensions Open Length in	Dimensions Open Length mm	Dimensions Sleeve Dia. in	Dimensions Sleeve Dia. mm	Weight Ea. oz
OB 5/16	6204	0(2)	0	0.156	4.0	5/16-24	K0	1.53	39.0	1.17	30.00	0.85	22.0	2
1B 3/8	6208	0(1)	1	0.250	6.5	3/8-24	K1	1.95	50.0	1.57	40.00	1.12	28.0	5
2BA 3/8	6219	0(1)	1	0.375	10.0	3/8-24	K2	2.81	71.0	2.17	55.00	1.67	42.0	13
41BA 3/8	30728	0(1)	1	0.375	10.0	3/8-24	K30	2.50	63.5	2.05	52.07	1.43	36.3	8
41BA 3/8-S	31138	0(1)	1	0.375	10.0	3/8-24	K30	2.50	63.5	2.05	52.07	1.43	36.3	8
41BA 1/2	31090	0(1)	1	0.375	10.0	1/2-20	K30	2.50	63.5	2.05	52.07	1.43	36.3	8
33BA 1/2	6287	0.08	2	0.500	13.0	1/2-20	K32	3.09	78.0	2.43	62.00	1.79	45.0	17
33BA 3/8	6283	0.08	2	0.500	13.0	3/8-24	K32	3.09	78.0	2.43	62.00	1.79	45.0	17
33BA 5/8	6289	0.08	2	0.500	13.0	5/8-16	K32	3.09	78.0	2.43	62.00	1.79	45.0	17

(1) At minimum capacity will hold a No. 60 (0.040in /1mm) drill.
(2) Model OB 5/16 has a minimum capacity of a No. 80 (.0135in /.344mm) drill.

Replacement Parts

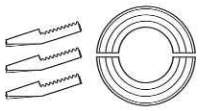

Jaw & Nut Unit

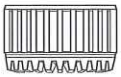

Sleeve

Chuck Series No.	Jaw and Nut Unit Model No.	Jaw and Nut Unit Part No.	Sleeve Model No.	Sleeve Part No.
34	U34	7424	S34	5046
33	U33	7423	S33	5016
3	U3	7417	S3	4944
36	U36	7425	S36	5066

INDUSTRIAL KEYLESS CHUCKS


THE Jacobs CHUCK MANUFACTURING CO.

CERTIFICATE OF INSPECTION

This Jacobs High Precision Keyless Chuck Has Been Tested And Inspected To Jacobs Standards, Under Conditions Similar To Manufacture We Guarantee This Product To Be Accurate As Stated.

Serial No.	Inspected By:	Date:	T.I.R. (in.)

The Jacobs Chuck Manufacturing Company
One Jacobs Road
Clemson, SC 29633
Phone: (803) 654-5926 Fax: (803) 654-2568
(800) 826-8066

Precision design combines keyless operation with the ultimate in drill chuck accuracy.

Jacobs® Industrial Keyless Chucks are high precision devices specifically designed for high accuracy applications on either conventional or CNC equipment. Tightened and released by hand, they permit more rapid tooling changes to increase machining productivity. A self-tightening feature produces significantly higher gripping force to resist tool shank slippage. Precision manufactured and tested to the most exacting quality standards, Jacobs® Industrial Keyless Chucks can be counted on for extremely high reliability and durability under the most demanding machining conditions.

Features

- Precision tested and certified to .0016" T.I.R. or better.
- Self-tightening feature automatically increases gripping force proportional to increased torque to prevent tool shank slippage.
- All components exposed to wear are completely hardened to maintain accuracy and extend chuck life.
- Jacobs® taper mount permits use on a wide range of high accuracy drill presses, jig borers, milling machines and production drilling equipment.

High Precision Model


JKP

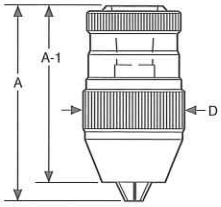

- For general machining applications.

Model No.	Part No.	Capacity Range* Minimum in	Minimum mm	Maximum in	Maximum mm	Mount Jacobs	Dimensions Closed Lgth (A) in	Closed Lgth (A) mm	Open Lgth (A-1) in	Open Lgth (A-1) mm	Sleeve Dia. (D) in	Sleeve Dia. (D) mm	Weight Ea. oz
JKP 65-J1	31121	0.000	0	0.255	6.5	1JT	2.76	70	2.44	62	1.28	32.5	11
JKP 80-J2S	9679	0.000	0	0.315	8.0	J2S	2.91	74	2.64	67	1.46	37.0	14
JKP 100-J2	9681	0.000	0	0.394	10.0	J2	3.50	89	3.19	81	1.61	41.0	22
JKP 100-J33	9680	0.000	0	0.394	10.0	J33	3.50	89	3.19	81	1.61	41.0	22
JKP 130-J2	9683	0.039	1	0.512	13.0	J2	3.90	99	3.46	88	1.81	46.0	32
JKP 130-J33	9682	0.039	1	0.512	13.0	J33	3.90	99	3.46	88	1.81	46.0	32
JKP 130-J6	9684	0.039	1	0.512	13.0	J6	3.90	99	3.46	88	1.81	46.0	32
JKP 160-J6	9685	0.118	3	0.630	16.0	J6	4.21	107	3.74	95	2.17	55.0	42

High Torque/High Precision Model


JKT

- Precision tested and certified to .0016" T.I.R. or better.
- For use on CNC machining centers in drilling, boring, counter-boring and milling operations requiring heavy penetration.
- Furnished with milled wrench flats and spanner wrench to allow the application of supplementary gripping torque. Light tightening increases gripping torque up to 3 times higher than hand tightening.
- Resists tool loosening on high speed machines with right hand rotation and instant spindle stop.

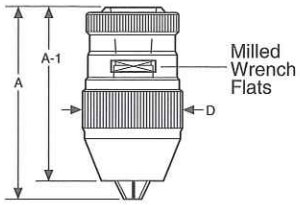

Model No.	Part No.	Capacity Range* Minimum in	Minimum mm	Maximum in	Maximum mm	Mount Jacobs	Dimensions Closed Lgth (A) in	Closed Lgth (A) mm	Open Lgth (A-1) in	Open Lgth (A-1) mm	Sleeve Dia. (D) in	Sleeve Dia. (D) mm	Weight Ea. oz
JKT 65-J1	31122	0.000	0	0.255	6.5	1JT	2.76	70	2.44	62	1.28	32.5	11
JKT 80-J2S	30526	0.000	0	0.315	8.0	J2S	2.91	74	2.64	67	1.46	37.0	14
JKT 130-J2	30527	0.039	1	0.512	13.0	J2	3.90	99	3.46	88	1.81	46.0	32
JKT 130-J33	30528	0.039	1	0.512	13.0	J33	3.90	99	3.46	88	1.81	46.0	32
JKT 130-J6	30529	0.039	1	0.512	13.0	J6	3.90	99	3.46	88	1.81	46.0	32
JKT 160-J6	30530	0.118	3	0.630	16.0	J6	4.21	107	3.74	95	2.17	55.0	42

***Minimum Capacities – Models JKP and JKT:**

Capacity:	Drill Size:
0-6.5mm	.012in (.300mm)
0-8mm	.012in (.300mm)
0-10mm	.020in (.500mm)
1-13mm	.033in (.850mm)
3-16mm	.114in (2.900mm)

INDUSTRIAL TOOLHOLDERS

Jacobs®

INDUSTRIAL KEYLESS CHUCKS WITH V-FLANGE MOUNTS

Designed to maximize drill chuck rigidity and precision on machining centers with automatic tool changers.

Features

- Choice of CAT-V flange or BT flange with Jacobs® High Torque/High Precision Keyless Chucks.
- Single taper connection eliminates intermediate arbors to assure high tool rigidity and drilling accuracy.
- Compact design, as compared to conventional tool setups, increases machining flexibility.
- Precision tested and individually certified for run-out (mounting taper to chuck capacity).

CAT-V Flange

JKC

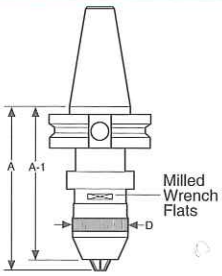

- Meets ANSI/ASME Standard B5.50—1994.
- Precision tested and certified to .0016" T.I.R. or better (mounting taper to chuck capacity).

Model No.	Part No.	Capacity Range Minimum in	Minimum mm	Maximum in	Maximum mm	Taper Size	Dimensions Closed Lgth (A) in	Closed Lgth (A) mm	Open Lgth (A-1) in	Open Lgth (A-1) mm	Sleeve Dia. (D) in	Sleeve Dia. (D) mm	Weight Ea. oz
JKC 80-30	30551	0.000	0	0.315	8	30	4.21	107	3.98	101	1.46	37	30
JKC 80-40	30552	0.000	0	0.315	8	40	3.46	88	3.23	82	1.46	37	45
JKC 130-40	30553	0.039	1	0.512	13	40	4.96	126	4.53	115	1.89	48	66
JKC 130-45	30554	0.039	1	0.512	13	45	5.16	131	4.72	120	2.17	55	79
JKC 130-50	30555	0.039	1	0.512	13	50	4.21	107	3.78	96	1.89	48	87
JKC 160-40	30556	0.039	1	0.630	16	40	4.21	107	3.78	96	1.89	48	129
JKC 160-50	30557	0.118	3	0.630	16	50	4.13	105	3.70	94	2.17	55	135

BT Flange

JKB

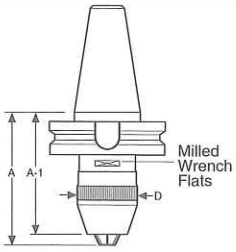

- Meets JMBTA Standard MAS 403—1982.
- Precision tested and certified to .0016" T.I.R. or better (mounting taper to chuck capacity).

Model No.	Part No.	Capacity Range Minimum in	Minimum mm	Maximum in	Maximum mm	Taper Size	Dimensions Closed Lgth (A) in	Closed Lgth (A) mm	Open Lgth (A-1) in	Open Lgth (A-1) mm	Sleeve Dia. (D) in	Sleeve Dia. (D) mm	Weight Ea. oz
JKB 80-30	30536	0.000	0	0.315	8	30	2.87	73	3.11	79	1.46	37	23
JKB 80-40	30537	0.000	0	0.315	8	40	3.14	80	2.84	72	1.46	37	44
JKB 80-40L*	30538	0.000	0	0.315	8	40	4.25	108	4.49	114	1.46	37	53
JKB 130-40	30539	0.039	1	0.512	13	40	3.39	86	3.82	97	1.89	48	54
JKB 130-40L*	30540	0.039	1	0.512	13	40	5.35	136	5.79	147	1.89	48	81
JKB 160-40	30541	0.118	3	0.630	16	40	4.13	105	4.57	116	2.17	55	68
JKB 130-45	30542	0.039	1	0.512	13	45	3.62	92	4.06	103	1.89	48	85
JKB 130-50	30543	0.039	1	0.512	13	50	3.82	97	4.25	108	1.89	48	146
JKB 160-50	30544	0.118	3	0.630	16	50	3.74	95	4.17	106	2.17	55	151
JKB 160-50L*	30545	0.118	3	0.630	16	50	5.71	145	6.14	156	2.17	55	185

* "L" indicates additional length.

WARNING -
Toolholder retention studs are not necessarily interchangeable across various types of toolholders or machine tool models. Use of metric threaded studs in inch threaded holders or vice versa is dangerous. Failure to use the proper thread or stud configuration can cause the toolholder to come free of the spindle resulting in serious personal injury.

INDUSTRIAL KEYLESS CHUCKS

High Precision Chuck Replacement Parts

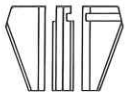

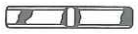

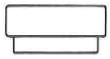

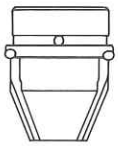

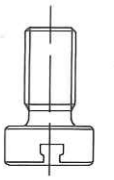

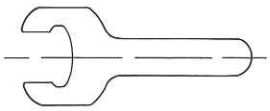

Model No.	Part No.	Description
J-65	31113	3 Jaw Set
J-80	31091*	3 Jaw Set
J-80	30605	3 Jaw Set
J-100	31095*	3 Jaw Set
J-100	30606	3 Jaw Set
J-130	30607	3 Jaw Set
J-160	30608	3 Jaw Set
H-65	31114	Hood
H-80	31092*	Hood
H-80	30609	Hood
H-100	31096*	Hood
H-100	30610	Hood
H-130	30611	Hood
H-160	30612	Hood
BB-65	**31308**	25 Ball Set
BB-80	**30613**	28 Ball Set
BB-100	**30614**	27 Ball Set
BB-130	**30615**	24 Ball Set
BB-160	**30686**	26 Ball Set
C-65	31115	Collar
C-80	30616	Collar
C-100	30617	Collar
C-130	30618	Collar
C-160	30619	Collar
S-65	**31116**	Ball Retainer
S-80	**30620**	Ball Retainer
S-100	**30621**	Ball Retainer
S-130	**30622**	Ball Retainer
S-160	**30623**	Ball Retainer
G-65	**31117**	Jaw Guide
G-80	**31093***	Jaw Guide
G-80	**30624**	Jaw Guide
G-100	**31097***	Jaw Guide
G-100	**30625**	Jaw Guide
G-130	**30626**	Jaw Guide
G-160	**30627**	Jaw Guide
GS-65	**31118**	Slotted Jaw Guide**
GS-80	**31094***	Slotted Jaw Guide**
GS-80	**30635**	Slotted Jaw Guide**
GS-130	**30636**	Slotted Jaw Guide**
GS-160	**30637**	Slotted Jaw Guide**
L-65	**31119**	Lead Screw
L-80	**30628**	Lead Screw
L-100	**30629**	Lead Screw
L-130	**30630**	Lead Screw
L-160	**30631**	Lead Screw
W-65	31123	Wrench
W-80	30632	Wrench
W-130	30633	Wrench
W-160	30634	Wrench

NOTES:

1. **Part numbers shown in bold face type require special tooling for disassembly. Consult factory.**
2. **Part numbers followed by asterisk (*) indicate design change for new version 2.5mm (.0980") jaws. To determine whether or not new version jaws are required, measure jaws as shown below in Figure 1.**
3. ****Slotted jaw guides are used exclusively with Model JKT chucks.**

Figure 1. Jaw Measurement Instructions

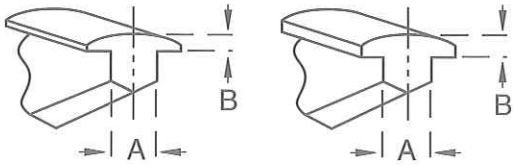

Old Version
B = 1.5mm

New Version
B = 2.5mm

TOOLHOLDER/ ADAPTERS

For use on machining centers with automatic tool changers. Choice of CAT-V flange or BT flange to Jacobs® taper arbor.

CAT-V Flange to Jacobs® Taper Arbor

JCJ

MADE IN USA

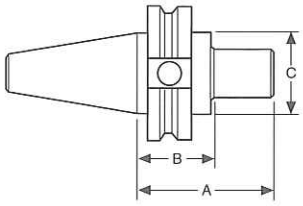

■ Meets ANSI/ASME Standard B5.50—1994.

Model No.	Part No.	Taper Size	Mount Jacobs	Dimensions A in	A mm	B in	B mm	C in	C mm	Weight Ea. oz
JCJ 30-J2	30566	30	J2	2.41	61.2	1.38	35.1	1.25	31.8	18
JCJ 30-J3	30567	30	J3	2.75	69.9	1.38	35.1	1.25	31.8	18
JCJ 30.J33	30568	30	J33	2.53	64.3	1.38	35.1	1.25	31.8	18
JCJ 30-J6	30569	30	J6	2.53	64.3	1.38	35.1	1.25	31.8	18
JCJ 40-J2	30570	40	J2	2.41	61.2	1.38	35.1	1.75	44.5	37
JCJ 40-J3	30571	40	J3	2.75	69.9	1.38	35.1	1.75	44.5	37
JCJ 40-J33	30572	40	J33	2.53	64.3	1.38	35.1	1.75	44.5	37
JCJ 40-J4	30573	40	J4	3.19	81.0	1.38	35.1	1.75	44.5	37
JCJ 40-J6	30574	40	J6	2.53	64.3	1.38	35.1	1.75	44.5	37
JCJ 45-J3	30575	45	J3	2.75	69.9	1.38	35.1	2.25	57.2	70
JCJ 45-J33	30576	45	J33	2.53	64.3	1.38	35.1	2.25	57.2	70
JCJ 45-J4	30577	45	J4	3.19	81.0	1.38	35.1	2.25	57.2	70
JCJ 45-J5	30578	45	J5	3.41	86.6	1.38	35.1	2.25	57.2	70
JCJ 50-J3	30579	50	J3	2.75	69.9	1.38	35.1	2.75	69.9	109
JCJ 50-J4	30580	50	J4	3.19	81.0	1.38	35.1	2.75	69.9	109
JCJ 50-J5	30581	50	J5	3.41	86.6	1.38	35.1	2.75	69.9	109

BT Flange to Jacobs® Taper Arbor

JBT

MADE IN USA

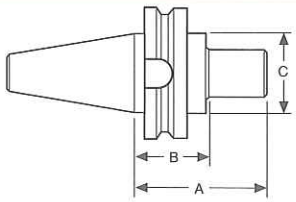

■ Meets JMBTA Standard MAS 403—1982.

Model No.	Part No.	Taper Size	Mount Jacobs	Dimensions A in	A mm	B in	B mm	C in	C mm	Weight Ea. oz
JBT 30-J2	30582	30	J2	2.27	57.7	1.36	34.5	1.25	31.8	18
JBT 30-J3	30583	30	J3	2.61	66.3	1.36	34.5	1.25	31.8	18
JBT 30-J33	30584	30	J33	2.39	60.7	1.36	34.5	1.25	31.8	18
JBT 30-J6	30585	30	J6	2.39	60.7	1.36	34.5	1.25	31.8	18
JBT 40-J2	30586	40	J2	2.09	53.1	1.18	30.0	2.48	63.0	37
JBT 40-J3	30587	40	J3	2.43	61.7	1.18	30.0	2.48	63.0	37
JBT 40-J33	30588	40	J33	2.21	56.1	1.18	30.0	2.48	63.0	37
JBT 40-J4	30589	40	J4	2.87	72.9	1.18	30.0	2.48	63.0	37
JBT 40-J6	30590	40	J6	2.21	56.1	1.18	30.0	2.48	63.0	37
JBT 45-J3	30591	45	J3	2.67	67.8	1.42	36.1	3.34	84.8	78
JBT 45-J33	30592	45	J33	2.45	62.2	1.42	36.1	3.34	84.8	78
JBT 45-J4	30593	45	J4	3.11	79.0	1.42	36.1	3.34	84.8	78
JBT 45-J5	30594	45	J5	3.33	84.6	1.42	36.1	3.35	85.0	78
JBT 50-J3	30595	50	J3	2.87	72.9	1.62	41.1	3.94	100.1	131
JBT 50-J4	30596	50	J4	3.31	84.1	1.62	41.1	3.94	100.1	131
JBT 50-J5	30597	50	J5	3.53	89.7	1.62	41.1	3.94	100.1	131

WARNING -
Toolholder retention studs are not necessarily interchangeable across various types of toolholders or machine tool models. Use of metric threaded studs in inch threaded holders or vice versa is dangerous. Failure to use the proper thread or stud configuration can cause the toolholder to come free of the spindle resulting in serious personal injury.

TAP CHUCKS

Complete range of flexible collet tap chucks for tapping machines and portable tappers. Simplify tap changing and provide unmatched accuracy.

Features

- Designed for use with the versatile Jacobs® Rubber-Flex® Collet which accepts and precisely centers both decimal and metric shank diameters.*
- Simple operation — one quarter turn of chuck screw allows nut to disengage back jaws. Tap shank sighting hole presents full view of tap square during changeovers.
- Each chuck, with one interchangeable Rubber-Flex® Collet, handles a wide range of tap sizes to speed tap size changes.
- Positive-drive chuck jaws always locate square of tap shank to ensure superior performance.
- Available with choice of Jacobs®, round or square hole mounts.

* **Refer to Pages 16 and 17 for Rubber-Flex® Collet information.**

Model No.	Part No.	Tap Capacity in	Tap Capacity mm	Mount Style	Overall Length @ Max Cap in	Overall Length @ Max Cap mm	Maximum Diameter in	Maximum Diameter mm	Round Shank Capacity Minimum in	Round Shank Capacity Minimum mm	Round Shank Capacity Maximum in	Round Shank Capacity Maximum mm	Available Rubber-Flex® Collets †	Weight Ea. oz
41-01	14121	#0-1/4	1.00-6.35	1JT*	2.00	51	0.84	21	0.09	2	0.25	6	J112,J113,J114,J116,J117	2
42-01	14123	#10-5/16	4.83-7.94	1JT*	2.50	64	1.06	27	0.09	2	0.38	10	J420,J421,J422,J423	6
42-02	14125	#10-5/16	4.83-7.94	2 short JT*	2.50	64	1.06	27	0.09	2	0.38	10	J420,J421,J422,J423	5
42-24	14129	#10-5/16	4.83-7.94	.3675 Dia.	2.50	64	1.06	27	0.09	2	0.38	10	J420,J421,J422,J423	6
42-J8	14127	#0-1/4	1.00-6.35	.375 Sq. Hole	2.31	59	1.06	27	0.09	2	0.38	10	J420,J421,J422,J423	6
44-02	14131	5/16-5/8	7.94-15.88	2JT*	3.12	79	1.47	37	0.11	3	0.50	13	J440,J441,J443	12
44-06	14133	5/16-5/8	7.94-15.88	6JT*	3.12	79	1.47	37	0.11	3	0.50	13	J440,J441,J443	12
44-J9	14135	#10-1/2	4.83-12.70	.500 Sq. Hole	3.12	79	1.47	37	0.11	3	0.50	13	J440,J441,J443	12

*Jacobs® Taper

† Rubber-Flex Collets® are not included. Must be ordered separately.

Replacement Parts

Nut

Back Jaws

Rubber-Flex® Collet

Model No.	Nut	Rubber-Flex® Collet	Back Jaws	Nut Wrench	Body Wrench
41-01	12792	J116, J117	6656	1848	1849
42-01	12793	J420,J421,J422,J423	6654	1850	1851
42-02	12793	J420,J421,J422,J423	6654	1850	1851
42-J8	12793	J420,J421,J422,J423	6654	1850	None
42-24	12793	J420,J421,J422,J423	6654	1850	1851
44-02	12794	J440,J441,J443	6655	1852	1850
44-06	12794	J440,J441,J443	6655	1852	1850
44-J9	12794	J440,J441,J443	6655	1852	None

DIE GRINDER CHUCKS

Compact tap chuck designed for use with Rubber-Flex® Collets holds mounted grinding burrs and rotary files on pneumatic and electric die grinders.

Features

- Compact design facilitates use for a wide range of applications.
- Integral seal protects collet components from abrasives and swarf.
- Rubber-Flex® Collets* furnished separately for tools with collet seating cones built into spindles.

* **Refer to Pages 16 and 17 for Rubber-Flex® Collet information.**

Model No.	Part No.	Capacity Range Minimum in	Capacity Range Minimum mm	Capacity Range Maximum in	Capacity Range Maximum mm	Mount Jacobs	Dimensions Closed Length in	Closed Length mm	Open Length in	Open Length mm	Sleeve Dia. in	Sleeve Dia. mm	Weight Ea. oz
100-61	9756	0.09	2.3	0.25	6.4	3/8-24	1.77	45.0	1.88	47.8	0.75	19.1	1.50

Nut for Die Grinder Chuck*

Model No.	Part No.
N100	12791

*Nut for Die Grinder Chuck, Model No. 100-61.

RUBBER-FLEX® COLLETS

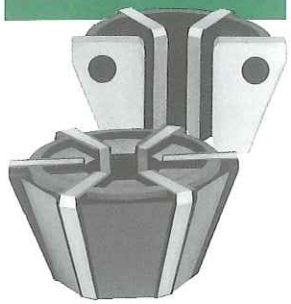

Jacobs® Rubber-Flex® collets outperform conventional split-steel collets in gripping power, accuracy and durability.

Unique in design and operation, the Jacobs® Rubber-Flex® Collet can generate two to three times the gripping power of a conventional split-steel collet. Gripping force is uniform and parallel throughout the collet contact length and not concentrated at the nose or back as is frequently the case with split-steel collets (see illustration below). Construction is of durable synthetic rubber compound permanently bonded to hardened steel jaw insert surfaces and through-holes. It is unaffected by heat, coolants and cutting compounds and retains its flexibility over a long service life as compared to spring tempered metal designs.

Rubber-Flex® Collets vs. Conventional Collets

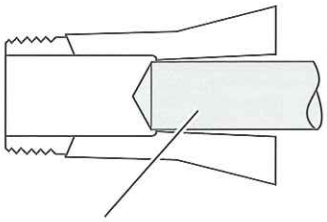

Oversized Bar

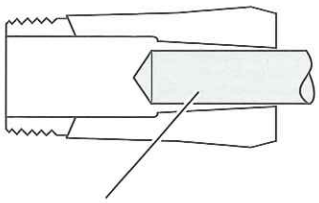

Undersized Bar

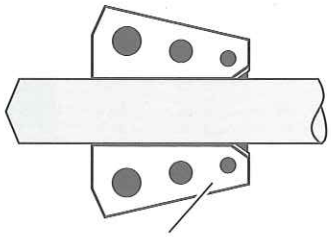

Rubber–Flex® Collet

Conventional split-steel collets provide maximum gripping efficiency only at actual bored or nominal capacity. They lose parallelism when chucking bars even a few thousandths over or under this capacity. This significantly reduces gripping strength and accuracy.

Rubber-Flex® Collets exert uniform gripping pressure throughout the collet contact length (within individual collet capacity ranges) regardless of bar tolerance deviations.

Features

- Parallel jaw insert surfaces exert uniform, accurate gripping force up to three times greater than can be achieved with split-steel collets.
- Each collet accepts and precisely centers a wide range of both decimal or metric diameters (within individual capacity ranges) to speed setups and increase machining productivity.
- Durable one-piece construction. Synthetic rubber retains flexibility and resists deterioration from heat, coolants and cutting compounds.
- Steel jaw inserts precision ground (after molding process) to assure maximum gripping accuracy (parallelism). Hardened for greater wear resistance than split steel collets.
- Each collet bore is held concentric to the O.D. tapers, both front and back, to minimize T.I.R.
- Automatically seals tool O.D. to permit coolant flow through tool reducing wear.
- Seals collets and machine spindles to protect from abrasive particles and swarf.

Tap Chuck Collets

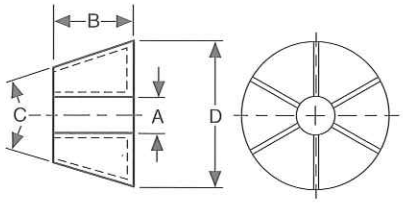

Model No.	Part No.	Capacity Range (A) Minimum in	Capacity Range (A) Minimum mm	Capacity Range (A) Maximum in	Capacity Range (A) Maximum mm	Contact Length (B) in	Contact Length (B) mm	Cone Angle (C) deg.	Outside Diameter (D) in	Outside Diameter (D) mm	Number of Inserts	Weight Ea. oz
J116	9757	0.094	2.4	0.177	4.5	0.468	11.9	26	0.590	15.1	6	0.10
J117	9758	0.177	4.5	0.256	6.5	0.468	11.9	26	0.590	15.1	8	0.10
J420	9747	0.176	4.5	0.320	8.1	0.500	12.7	40	0.941	23.9	6	0.20
J421	9748	0.139	3.5	0.257	6.5	0.500	12.7	40	0.941	23.9	6	0.20
J422	9751	0.253	6.4	0.383	9.7	0.500	12.7	40	0.941	23.9	6	0.30
J423	9817	0.090	2.3	0.180	4.6	0.500	12.7	40	0.860	21.8	4	0.30
J440	9749	0.280	7.1	0.500	12.7	0.630	16.0	45	1.296	32.9	6	0.30
J441	9750	0.176	4.5	0.383	9.7	0.630	16.0	45	1.296	32.9	6	0.30
J443	9867	0.110	2.8	0.280	7.1	0.620	15.7	45	1.180	30.0	4	0.30

Jacobs®

RUBBER-FLEX® COLLETS (continued)

Die Grinder Collets

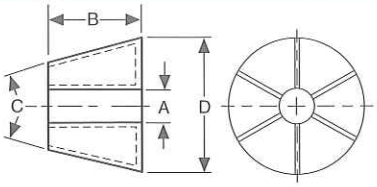

Model No.	Part No.	Capacity Range (A) Minimum in	Minimum mm	Maximum in	Maximum mm	Contact Length (B) in	Contact Length (B) mm	Cone Angle (C) deg.	Outside Diameter (D) in	Outside Diameter (D) mm	Number of Inserts	Weight Ea. oz
J116	9757	0.094	2.4	0.177	4.5	0.468	11.9	26	0.590	15.1	6	0.10
J117	9758	0.177	4.5	0.256	6.5	0.468	11.9	26	0.590	15.1	8	0.10

Lathe Chuck Collets

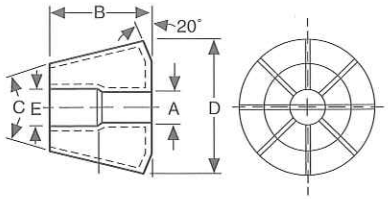

- Collets J910, J911 and J912 have a contact length of .90 in. (23mm). All other lathe chuck collets have full length contact.

Model No.	Part No.	Capacity Range (A) Minimum in	Minimum mm	Maximum in	Maximum mm	Contact Length (B) in	Contact Length (B) mm	Cone Angle (C) deg.	Outside Diameter (D) in	Outside Diameter (D) mm	Clearance Diameter (E) in	Clearance Diameter (E) mm	Number of Inserts	Weight Ea. oz
J910	9555	0.060	1.5	0.125	3.2	1.74	44.5	26	2.25	57	0.60	15.2	4	0.53
J911	9556	0.125	3.2	0.250	6.4	1.74	44.5	26	2.25	57	0.60	15.2	6	0.53
J912	9557	0.250	6.4	0.375	9.5	1.74	44.5	26	2.25	57	0.60	15.2	6	0.47
J913	9558	0.375	9.5	0.500	12.7	1.74	44.5	26	2.25	57	—	—	8	0.47
J914	9559	0.500	12.7	0.625	15.9	1.74	44.5	26	2.25	57	—	—	10	0.47
J915	9560	0.625	15.9	0.750	19.1	1.74	44.5	26	2.25	57	—	—	10	0.47
J916	9561	0.750	19.1	0.875	22.2	1.74	44.5	26	2.25	57	—	—	12	0.47
J917	9562	0.875	22.2	1.000	27.9	1.74	44.5	26	2.25	57	—	—	16	0.55
J918	9563	1.000	25.4	1.125	28.6	1.74	44.5	26	2.25	57	—	—	20	0.52
J919	9564	1.125	28.6	1.250	31.8	1.74	44.5	26	2.25	57	—	—	24	0.43
J920	9565	1.250	31.8	1.375	34.9	1.74	44.5	26	2.25	57	—	—	24	0.40
J921*	9567	1.375	34.9	1.500	38.1	1.74	44.5	26	2.25	57	—	—	24	0.27

*Requires special 1-1/2" nose.

Collet Plugs

- Maintain collet parallelism when gripping short workpieces.

Model No.	Part No.	For Rubber-Flex® Collets Model No.	Part No.
CP913-CP914	6049	J910	9555
CP913-CP914	6049	J911	9556
CP913-CP914	6049	J912	9557
CP913-CP914	6049	J913	9558
CP913-CP914	6049	J914	9559
CP915-CP916	6050	J915	9560
CP915-CP916	6050	J916	9561
CP917-CP918	6051	J917	9562
CP917-CP918	6051	J918	9563
CP919	6052	J919	9564
CP920	6053	J920	9565

NOTE: Collet plugs are not included with collets.

Jacobs®

ARBORS

Precision CNC machined and ground to ensure high accuracy and close-tolerance fit.

Features

- Precision machined and ground to master gages for maximum performance with Jacobs® drill and tap chucks.
- Adapt Jacobs® taper to: Morse tapers, straight shanks, threaded shanks and Bridgeport® tapers.
- Ideal for use with custom tool and work holder designs and for specialized machining applications.
- Manufactured by The Jacobs® Chuck Manufacturing Co., LTD, Sheffield, England.

Morse Taper to Jacobs® Taper

AO No.	Part No.	Description	Overall Length in	Overall Length mm	Weight Ea. oz
A0101	7299	1 Morse x 1JT	3.38	85.7	2
A0102	7300	1 Morse x 2JT	3.59	91.3	2
A0106	7303	1 Morse x 6JT	3.72	94.5	4
A0133	7304	1 Morse x 33JT	3.72	94.5	3
A0201	7306	2 Morse x 1JT	3.94	100.0	4
A0202	7307	2 Morse x 2JT	4.16	105.6	5
A0203	7308	2 Morse x 3JT	4.50	114.3	7
A0204	7309	2 Morse x 4JT	4.94	125.4	12
A0206	7311	2 Morse x 6JT	4.28	108.7	5
A0233	7312	2 Morse x 33JT	4.28	108.7	5
A0301	7313	3 Morse x 1JT	4.69	119.1	10
A0302	7314	3 Morse x 2JT	4.94	125.4	10
A0303	7315	3 Morse x 3JT	5.27	133.8	12
A0304	7316	3 Morse x 4JT	5.70	144.9	17
A0305	7317	3 Morse x 5JT	5.94	150.8	23
A0306	7318	3 Morse x 6JT	5.06	128.6	11
A0333	7319	3 Morse x 33JT	5.06	128.6	11
A0402	7320	4 Morse x 2JT	5.91	150.0	21
A0403	7321	4 Morse x 3JT	6.25	158.8	23
A0404	7322	4 Morse x 4JT	6.69	169.9	30
A0405	7323	4 Morse x 5JT	6.91	175.4	35
A0406	7324	4 Morse x 6JT	6.03	153.2	21
A0433	7325	4 Morse x 33JT	6.06	154.0	22
A0503	7327	5 Morse x 3JT	7.50	190.5	53
A0504	7328	5 Morse x 4JT	7.94	201.6	58
A0505	7329	5 Morse x 5JT	8.16	207.2	65

Straight Shank to Jacobs® Taper

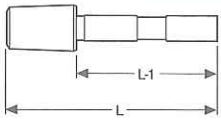

AO No.	Part No.	Description	Dimensions: Straight Shank (L-1) in	Straight Shank (L-1) mm	Overall Length (L) in	Overall Length (L) mm	Weight Ea. oz
A4000	7348	1/2" x 0JT	2.500	63.5	3.094	78.6	2
A4001	7349	1/2" x 1JT	2.500	63.5	3.312	84.1	2
A4002	7350	1/2" x 2JT	2.500	63.5	3.531	89.7	2
A4003	7351	1/2" x 3JT	2.500	63.5	3.875	98.4	4
A4006	7353	1/2" x 6JT	2.500	63.5	3.656	92.9	4
A4033	7354	1/2" x 33JT	2.500	63.5	3.656	92.9	4
A4101	7355	5/8" x 1JT	2.500	63.5	3.312	84.1	4
A4102	7356	5/8" x 2JT	2.500	63.5	3.531	89.7	5
A4103	7357	5/8" x 3JT	2.500	63.5	3.875	98.4	6
A4106	7359	5/8" x 6JT	2.500	63.5	3.656	92.9	5
A4133	7360	5/8" x 33JT	2.500	63.5	3.656	92.9	5
A4202	7361	3/4" x 2JT	3.000	76.2	4.031	102.4	6
A4203	7362	3/4" x 3JT	3.000	76.2	4.375	111.1	7
A4206	7364	3/4" x 6JT	3.000	76.2	4.156	105.6	6
A4233	7365	3/4" x 33JT	3.000	76.2	4.156	105.6	6
A4303	7367	1" x 3JT	3.000	76.2	4.375	111.1	11
A4306	7368	1" x 6JT	3.000	76.2	4.156	105.6	10

ARBORS

Threaded Shank to Morse Taper

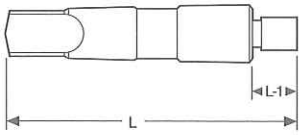

AO No.	Part No.	Description	Dimensions: Overall Length (L) in	Overall Length (L) mm	Threaded Extension (L-1) in	Threaded Extension (L-1) mm	Weight Ea. oz
AO261	7345	2 Morse 3/8" x 24	3.69	93.7	0.56	14.3	4
AO264	7346	2 Morse 1/2" x 20	4.06	103.2	0.56	14.3	5
AO268	7347	2 Morse 5/8" x 16	4.19	106.4	0.69	17.5	5

Bridgeport® Taper to Jacobs® Taper

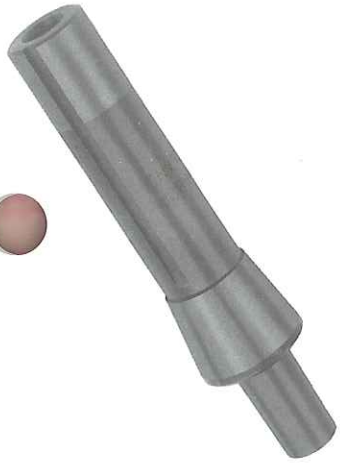

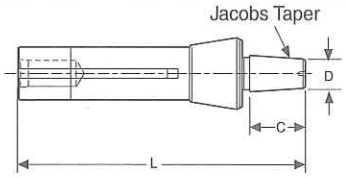

AO No.	Part No.	Mount Jacobs	Dimensions: Overall Length (L) Minimum in	Overall Length (L) Minimum mm	Overall Length (L) Maximum in	Overall Length (L) Maximum mm	Length (C) Minimum in	Length (C) Minimum mm	Length (C) Maximum in	Length (C) Maximum mm	Diameter (D) Minimum in	Diameter (D) Minimum mm	Diameter (D) Maximum in	Diameter (D) Maximum mm	Weight Ea. oz
AO802	7339	2 JT	5.18	131.6	5.20	132.2	0.91	23.0	0.92	23.4	0.49	12.4	0.49	12.4	16
AO803	7340	3 JT	5.53	140.4	5.55	140.9	1.25	31.8	1.27	32.1	0.75	18.9	0.75	19.0	17
AO804	7341	4JT	5.97	151.6	5.98	151.8	1.69	42.9	1.70	43.2	1.04	26.3	1.04	26.4	17
AO806	7342	6 JT	5.31	134.8	5.33	135.4	1.03	26.2	1.05	26.6	0.62	15.8	0.63	15.9	16
AO833	7343	33 JT	5.31	134.8	5.33	135.4	1.03	26.2	1.05	26.6	0.56	14.2	0.56	14.3	16

How to Order Arbors

When ordering arbors

Either of the following is correct:

1. Show the style and size of the mounting shank and the model number of the Jacobs® chuck to which the arbor will be fitted.
   Example: A #2 Morse taper shank arbor for a #34 Jacobs® chuck.
2. Show the style and size of the mounting shank plus the actual Jacobs® taper desired.
   Example: A #2 Morse taper shank with a #3 Jacobs® taper.

Motor Shaft Adapter

- Adapts No. 2 Jacobs® taper to 1/2" diameter motor shaft.

Model No.	Part No.	Motor Shaft Size	Jacobs Taper
AD2502	7374	1/2"Dia.	2JT

DRILL SLEEVES AND EXTENSION SOCKETS

Archer® precision machine tool accessories for maximum flexibility in tooling setups.

Drill Sleeves — Morse Taper

Archer® Series 600 and 700

- Adapt smaller Morse taper shank tools to larger machine spindles.
- Oil toughened and externally precision ground with hardened tang.
- Outside Morse taper sizes are 1 through 6; inside Morse taper sizes are 0 through 5.
- **Series 700 drill sleeves are through-hardened and precision ground both internally and externally.**

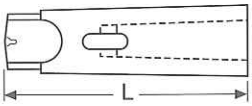

Series 600		Series 700				Dimensions		Weight
Model	Part	Model	Part	Morse Taper No.		Overall Length (L)		Ea.
No.	No.	No.	No.	Outside	Inside	in	mm	oz
610	30421	710	30432	1	0	2.56	65	1
621	30422	721	30433	2	1	3.62	92	2
632	30423	732	30434	3	2	4.38	111	5
631	30424	731	30435	3	1	3.88	98	6
643	30425	743	30436	4	3	5.50	140	13
642	30426	742	30437	4	2	4.88	124	14
641	30427	741	30438	4	1	4.88	124	17
651	30638	751	30762	5	1	6.12	156	47
654	30428	754	30439	5	4	6.69	170	35
653	30429	753	30440	5	3	6.12	156	41
652	30430	752	30441	5	2	6.12	156	46
664	30639	764	30822	6	4	8.56	217	88
665	30431	765	30442	6	5	8.56	217	90

Extension Sockets — Morse Taper

Archer® Series 800

- Extend tool lengths and application distances while adapting for increases or decreases in applied tool Morse taper sizes.
- Externally precision ground with hardened tang.
- Outside and inside Morse taper sizes are 1 through 5.

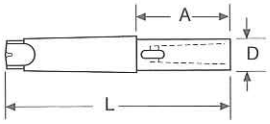

Series 800				Dimensions						Weight
Model	Part	Morse Taper No.		Overall Length (L)		Length (A)		Diameter (D)		Ea.
No.	No.	Outside	Inside	in	mm	in	mm	in	mm	oz
811	30443	1	1	5.71	145	2.99	76	0.79	20	5
812	30444	1	2	6.30	160	3.58	91	1.18	30	14
821	30445	2	1	6.30	160	2.99	76	0.79	20	9
822	30446	2	2	6.89	175	3.58	91	1.18	30	16
823	30447	2	3	7.72	196	4.41	112	1.42	36	24
831	30448	3	1	6.89	175	2.99	76	0.79	20	14
832	30449	3	2	7.64	194	3.58	91	1.18	30	23
833	30450	3	3	8.46	215	4.41	112	1.42	36	30
834	30451	3	4	9.45	240	5.39	137	1.89	48	55
842	30640	4	2	8.46	215	3.58	91	1.18	30	41
843	30452	4	3	9.45	240	4.41	112	1.42	36	42
844	30453	4	4	10.43	265	5.39	137	1.89	48	65
845	30454	4	5	11.81	300	6.77	172	2.48	63	76
853	30641	5	3	10.35	263	4.41	112	1.42	36	100
854	30455	5	4	11.81	300	5.39	137	1.89	48	102
855	30456	5	5	13.19	335	6.77	172	2.48	63	76

Jacobs®

TURRET SOCKETS AND EJECTING DRIFTS

Turret Sockets — Morse Taper

Archer® Series 500

- Permit the use of Morse taper shank tools in straight-hole mounting applications.
- Through-hardened and precision ground internally and externally.
- Inside Morse taper sizes 1 through 4.

Model No.	Part No.	Morse Taper No. Inside	Dimensions Length in	Dimensions Length mm	Dimensions Diameter in	Dimensions Diameter mm	Weight Ea. oz
531	30471	1	3.50	88.9	0.75	19.0	5
541	30472	1	3.50	88.9	1.00	25.4	7
561	30473	1	3.50	88.9	1.50	38.1	25
542	30474	2	4.00	101.6	1.00	25.4	12
552	30475	2	4.00	101.6	1.25	31.8	16
562	30476	2	4.00	101.6	1.50	38.1	44
582	30477	2	4.00	101.6	2.00	50.8	49
553	30478	3	4.75	120.7	1.25	31.8	32
563	30479	3	4.75	120.7	1.50	38.1	35
573	30480	3	4.75	120.7	1.75	44.5	39
583	30481	3	4.75	120.7	2.00	50.8	41
564	30482	4	6.00	152.4	1.50	38.1	34
584	30483	4	6.00	152.4	2.00	50.8	39

Ejecting Drifts

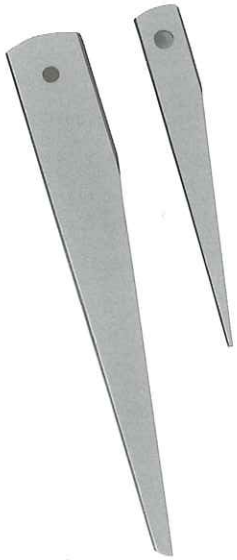

- Hardened and tempered.
- Eject Morse taper sizes 0 through 6 from sleeves, sockets and machine spindles.

Model No.	Part No.	For Ejection Of:	Weight Ea. oz
900	30484	No. 0 Morse Taper	1
902	30485	Nos. 1 & 2 Morse Tapers	3
903	30486	Nos. 3 & 4 Morse Tapers	6
904	30487	Nos. 4 & 5 Morse Tapers	12
906	30488	No. 6 Morse Tapers	21
914	30489	Combined Drifts Nos. 1,2,3, and 4 Inclusive	10

ROTATING (LIVE) CENTERS

Jacobs® rotating centers are precision engineered and manufactured to ensure high work holding accuracy in either conventional or CNC applications.

Features

- Compact design maximizes tool clearance and machining flexibility for confined area work.
- Body and center hardened and ground for high durability and extended life.
- Accurate to .0002" (.005mm) to .0004" (.010mm) T.I.R. to ensure performance when machining to close tolerances.
- Designed for speeds up to 6000 rpm to allow use on a wide range of machine tools.
- Standard or extended nose configurations offered on centers with either standard or reduced body diameters.
- **60° Standard Angle of Center.**

Standard Nose with Standard Body Diameter

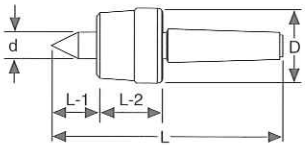

- Designed for wide range of general turning work.

Model No.	Part No.	Morse Taper No.	Dimensions D in	D mm	d in	d mm	L in	L mm	L-1 in	L-1 mm	L-2 in	L-2 mm	Max. Speed rpm	Weight Ea. oz
JLS-M200	30502	2	1.77	45	0.79	20	5.43	138	0.98	25	1.69	43	5000	14.4
JLS-M300	30503	3	2.36	60	0.94	24	6.81	173	1.38	35	1.97	50	4300	30.4
JLS-M400	30504	4	2.99	76	1.26	32	8.27	210	1.65	35	2.28	58	3200	52.8
JLS-M500	30505	5	3.78	96	1.65	42	10.24	260	1.89	48	2.83	72	2600	139.2

Standard Nose with Reduced Body Diameter

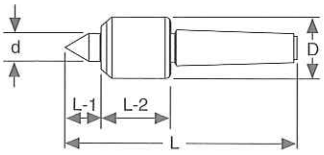

- Provides additional clearance for confined area machining applications.

Model No.	Part No.	Morse Taper No.	Dimensions D in	D mm	d in	d mm	L in	L mm	L-1 in	L-1 mm	L-2 in	L-2 mm	Max. Speed rpm	Weight Ea. oz
JLR-M200	30509	2	1.26	32	0.59	15	4.96	126	0.71	18	1.46	37	6000	11.2
JLR-M300	30510	3	1.34	34	0.59	15	5.67	144	0.71	18	1.46	37	6000	16.0
JLR-M400	30511	4	1.65	42	0.79	20	7.05	179	0.98	25	1.65	42	6000	35.2
JLR-M500	30512	5	2.28	58	1.18	30	9.25	235	1.50	38	2.40	61	4000	91.2

Extended Nose with Standard Body Diameter

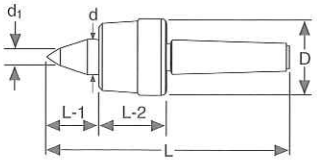

- Increases tool clearance and operator visibility for work on small parts or machining close to workpiece ends.

Model No.	Part No.	Morse Taper No.	Dimensions D in	D mm	d in	d mm	d-1 in	d-1 mm	L in	L mm	L-1 in	L-1 mm	L-2 in	L-2 mm	Max. Speed rpm	Weight Ea. oz
JLE-M300	30506	3	2.36	60	0.94	24	0.39	10	7.24	184	1.81	46	1.97	50	4300	41.6
JLE-M400	30507	4	2.99	76	1.26	32	0.47	12	8.98	228	2.36	60	2.28	58	3200	84.8
JLE-M500	30508	5	3.78	96	1.65	42	0.63	16	11.14	283	2.80	71	2.83	72	2600	176.0

STATIONARY (DEAD) CENTERS

Full line of tungsten carbide tipped lathe centers with Morse taper and 60° angle joints.

Features

- Full tungsten carbide point increases wear resistance for turning or grinding applications and provides longer regrind life.
- Integral strength of one-piece body resists deflection for positive work holding.
- Precision ground points provide higher finished part accuracy.

Short Type without flats

Model No.	Part No.	Morse Taper No.	Overall Length in	Overall Length mm	Weight Ea. oz
TS1	30490	1	2.758	70	2.0
TS2	30491	2	3.347	85	6.5
TS3	30492	3	4.331	110	10.0
TS4	30493	4	5.512	140	23.0
TS5	30494	5	7.087	180	59.0

Long Type with flats

Model No.	Part No.	Morse Taper No.	Overall Length in	Overall Length mm	Weight Ea. oz
TL1	30495	1	3.150	80	2.50
TL2	30496	2	3.937	100	7.25
TL3	30497	3	4.921	125	14.00
TL4	30498	4	5.299	135	30.00

Long Type with Half 60° Point

Model No.	Part No.	Morse Taper No.	Overall Length in	Overall Length mm	Weight Ea. oz
TL1 half	30499	1	3.150	80	2.0
TL2 half	30500	2	3.937	100	6.5
TL3 half	30501	3	4.921	125	10.0

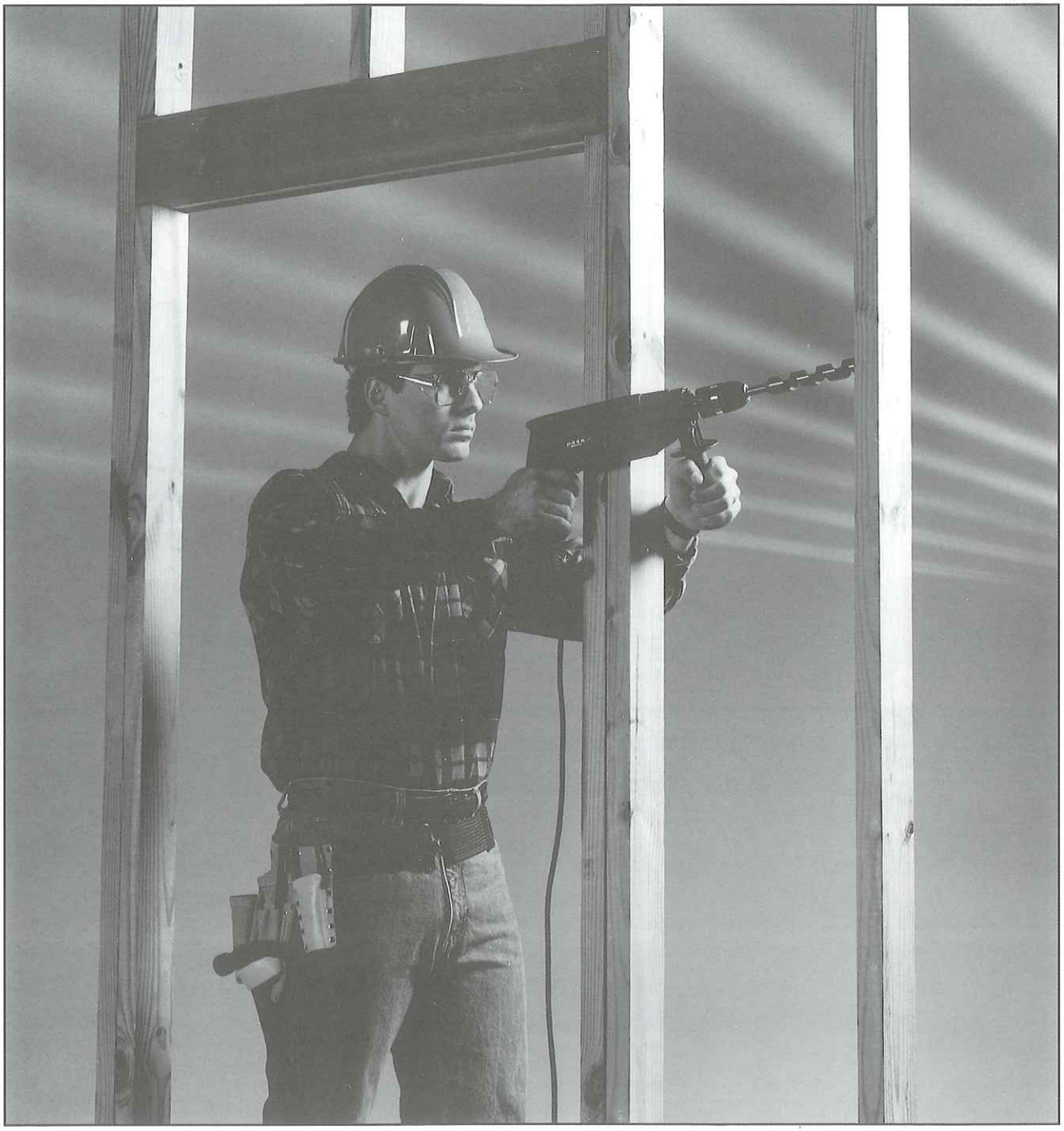

Jacobs®

FOR A BETTER GRIP ON PRECISION®

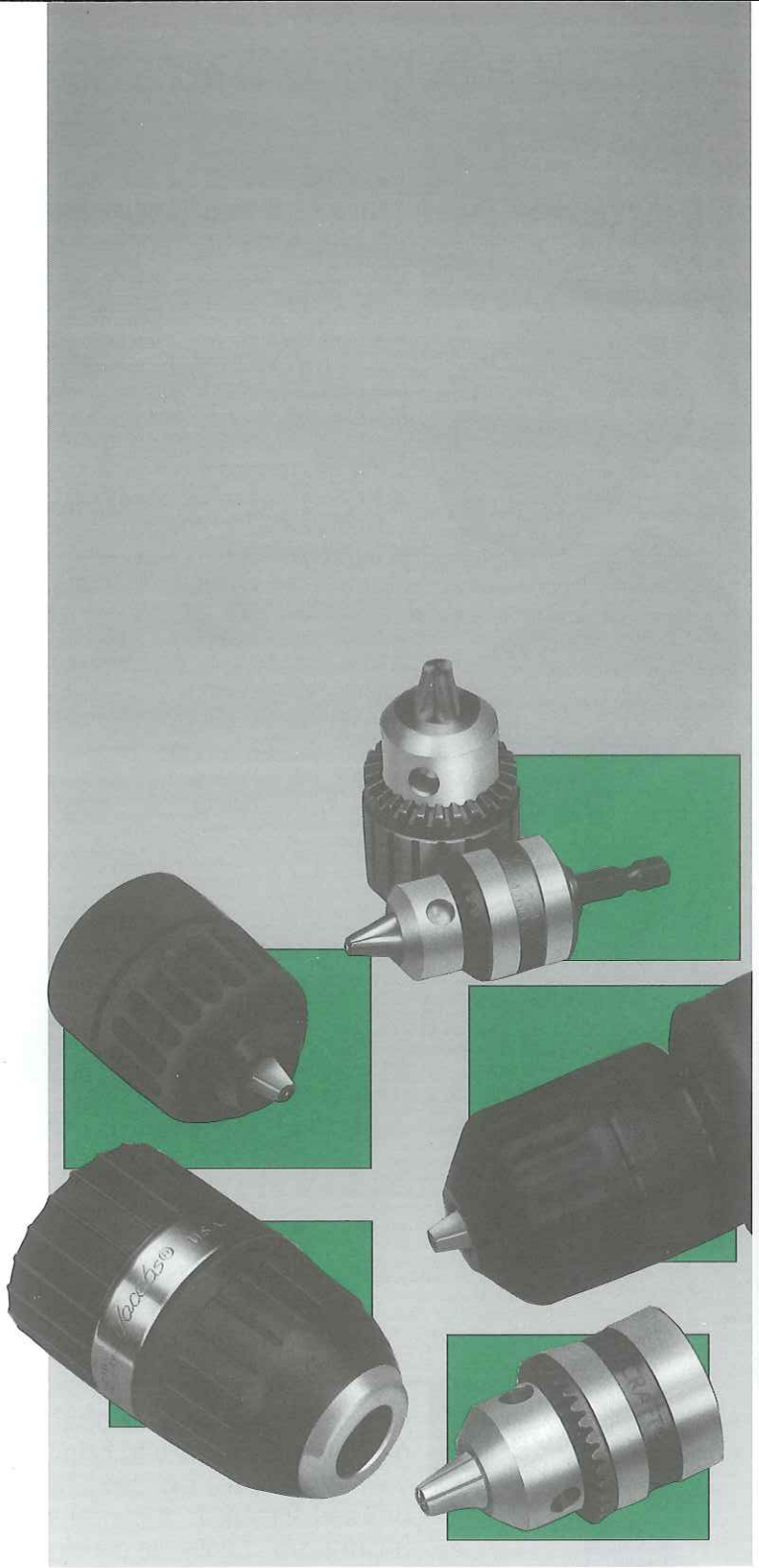

Keyless Chucks
Keyed Chucks
Special Purpose Chucks
Keys and Accessories

PORTABLE TOOL CHUCKS AND ACCESSORIES

Jacobs®

HAND-TITE® KEYLESS DRILL CHUCKS

Patented keyless design, with 10mm and 13mm capacities, produces greater bit gripping force than conventional keyed chucks.

Hand-Tite® keyless operation increases operator productivity and convenience by speeding bit changeovers and eliminating downtime caused by loss of chuck keys. Ergonomic design increases hand tightening efficiency and user comfort.

Components are constructed from high performance materials designed to provide durable, long lasting performance.

Features

- **Keyless Operation.** Permits fast bit changes without lost key delays.
- **Superior Gripping Force.** Provides high mechanical advantage to convert hand tightening torque into superior bit gripping force.
- **Versatility.** Models available to fit all 10mm (3/8") and 13mm (1/2") variable speed corded and cordless portable drills.
- **Precision Operation.** Meet or exceed stringent DIN run-out and dimensional specifications.
- **Ergonomic Design.** Material and surface finish combinations result in increased comfort and performance.
- **Rugged Construction.** Constructed of high performance materials to maximize durability and performance.

MADE IN USA

Hand-Tite® Keyless Drill Chucks

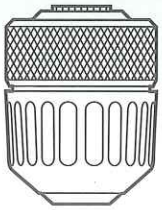

Model/ Part No.	Features	Capacity Range Minimum in	Capacity Range Minimum mm	Capacity Range Maximum in	Capacity Range Maximum mm	Mount Thread	Dimensions Overall Length in	Dimensions Overall Length mm	Dimensions Sleeve Dia. in	Dimensions Sleeve Dia. mm	Boss/Body Clearance in	Boss/Body Clearance mm	Weight Ea. oz	Standard Pack Quantity	Standard Pack Weight lb.
10mm Capacity (3/8")															
30354	Hard Nose, Black Finish	0.040	1.0	0.375	10	3/8-24	2.00	54.6	1.67	42.7	0.126	3.00	6.5	4	1.8
13mm Capacity (1/2")															
31038	Hard Nose, Black Finish	0.062	2.0	0.500	13	1/2-20	2.90	73.7	1.68	42.7	0.082	2.08	12.0	3	2.8
31037	Hard Nose, Black Finish	0.062	2.0	0.500	13	3/8-24	2.90	73.7	1.68	42.7	0.082	2.08	12.0	3	2.8

Hand-Tite® Countertop Merchandiser

This convenient merchandiser was developed exclusively to help you grab your share of the big Hand-Tite® keyless drill chuck market. It contains six of our popular 3/8" Hand-Tite chucks shipped in a carton that easily converts into an eye-catching countertop display.

Part Number 61515

HAND-TITE® KEYLESS HAMMER DRILL CHUCKS

Unique, patented Hammerlock® mechanism expands Hand-Tite® keyless chuck performance and convenience to include 13mm AC or cordless hammer drills.

Hammer-capable Hand-Tite® chucks are designed specifically for use on professional hammer drills. They are equipped with the unique Hammerlock® mechanism.

This patented device automatically engages as the chuck is tightened on the drill bit. It then maintains full gripping pressure to prevent drill bit slippage during hammer drilling. Unlike rigid locking systems which cannot compensate for the effects of impact and vibration, the Hammerlock® system absorbs and compensates for these forces. The result is reliable and consistent performance under severe operating conditions.

Features

- **Hammerlock® Mechanism.** Automatically engages as the chuck is tightened and maintains full gripping pressure to prevent bit slippage during hammer drilling.
- **Precision Operation.** Meets or exceeds stringent DIN run-out and dimensional specifications.
- **Ergonomic Design.** Non-slip gripping surfaces enhance hand tightening capability and increase user comfort.
- **Hard Nose.** Protects chuck from work surface abrasion.
- **Rugged Construction.** Provides extended service under the most demanding concrete hole drilling conditions.
- **Keyless Convenience.** Offers fast bit changeover, superior gripping force and no lost key delays.
- **Performance.** Tested and approved on a wide range of AC powered and cordless hammer drills.

Hand-Tite® Hammer Drill Chucks

Model/ Part No.	Features	Capacity Range Minimum in	Capacity Range Minimum mm	Capacity Range Maximum in	Capacity Range Maximum mm	Mount Thread	Dimensions Overall Length in	Dimensions Overall Length mm	Dimensions Sleeve Dia. in	Dimensions Sleeve Dia. mm	Boss/Body Clearance in	Boss/Body Clearance mm	Weight Ea. oz	Standard Pack Quantity	Standard Pack Weight lb.
13mm Capacity (1/2")															
31237	Hammerlock® Mechanism, Black Finish	0.062	2.0	0.500	13	1/2-20	2.61	66.2	1.68	42.7	0.079	2.0	12.0	3	2.8

Industrial quality drill chuck gives precision performance for the tradesman or serious home craftsman.

The Jacobs® Professional Duty Chuck brings professional quality and accuracy to the tradesman or serious home craftsman. These chucks are standard equipment on many of the world's finest commercial-grade drills. No other chuck in its class can match the accuracy, grip and strength produced by the Jacobs® Professional Chuck with its through-hardened jaws and durable internal construction. Each chuck is individually quality inspected and backed by Jacobs® Warranty.

Features

- Industrial quality.
- Through-hardened jaws provide hard, durable gripping surfaces.
- One-piece sleeve eliminates crack between driving teeth often found in other designs.
- Fluted sleeve finish.
- Each chuck 100% inspected for performance and precision.

Model/ Part No.	Capacity Range Minimum in	Capacity Range Minimum mm	Capacity Range Maximum in	Capacity Range Maximum mm	Mount Thread	Key No.	Dimensions Closed Length in	Dimensions Closed Length mm	Dimensions Open Length in	Dimensions Open Length mm	Dimensions Sleeve Dia. in	Dimensions Sleeve Dia. mm	Weight Ea. oz	Standard Pack Quantity	Standard Pack Weight lb.
30246	0.063	1.6	0.375	10	3/8-24	KK	2.42	61.5	1.89	48.0	1.42	36.1	8.0	4	2.6
31052	0.063	1.6	0.500	13	1/2-20	KK	3.00	76.2	2.30	58.4	1.72	43.6	13.0	3	3.1

The world's most popular drill chuck for portable power tools.

The Multi-Craft® Drill Chuck is mounted as original equipment on more drills than any other chuck by both domestic and import drill manufacturers. It features through-hardened jaws and a design found only in competitors' industrial-grade chucks. Each chuck is backed by the Jacobs® Warranty. Ideal for corded or cordless reversible or nonreversible power drills.

Features

- Offered in 1/4", 3/8" and 1/2" capacities.
- Through-hardened jaws for hard, wear resistant gripping surfaces.

Model/ Part No.	Capacity Range Minimum in	Capacity Range Minimum mm	Capacity Range Maximum in	Capacity Range Maximum mm	Mount Thread	Key No.	Sleeve Finish	Sleeve Diameter in	Sleeve Diameter mm	Weight Ea. oz	Standard Pack Quantity	Standard Pack Weight lb.
1/4" Capacity												
30243	0.028	0.7	0.250	6.5	3/8-24	KG1	Ground-Matte Band	1.13	28.6	3.5	4	1.4
3/8" Capacity												
30247	0.062	1.5	0.375	10.0	3/8-24	KG1	Ground-Black Band	1.22	31.1	5.0	4	1.7
1/2" Capacity												
30598	0.078	2.0	0.500	13.0	3/8-24	KK	Ground-Bright Band	1.61	41.0	11.0	3	2.5
30602	0.078	2.0	0.500	13.0	1/2-20	KK	Ground-Bright Band	1.61	41.0	11.0	3	2.4

SPECIAL PURPOSE CHUCKS

Adapt-A-Drive® Chuck

Converts any cordless screwdriver to a multi-purpose mini-drill for bit sizes up to 1/4".

MADE IN USA

- Easy conversion – integral hex mount locks the Adapt-A-Drive® chuck into the screwdriver bit socket.
- Ideal for use in starting screw holes for use in hard-to-reach spaces.

Model/ Part No.	Capacity Range Minimum in	Capacity Range Minimum mm	Capacity Range Maximum in	Capacity Range Maximum mm	Mount Thread	Key No.	Sleeve Finish	Sleeve Diameter in	Sleeve Diameter mm	Weight Ea. oz	Standard Pack Quantity	Standard Pack Weight lb.
30248	0.028	0.7	0.250	6.5	.250-Hex	KG1	Ground-Matte Band	1.13	28.6	3.5	4	1.5

Stainless Steel Chucks

- For special applications on either portable air operated or stationary machine tools.
- Resist chemical corrosion and reduce potential for hazardous sparking.

MADE IN USA

Model No.	Part No.	Capacity Range Minimum in	Capacity Range Minimum mm	Capacity Range Maximum in	Capacity Range Maximum mm	Mount Style	Key No.	Dimensions Closed Length in	Dimensions Closed Length mm	Dimensions Open Length in	Dimensions Open Length mm	Dimensions Sleeve Dia. in	Dimensions Sleeve Dia. mm	Weight Ea. oz
OM	6624	0(1)	0	0.156	4	0 JT(2)	KOM	1.45	37	1.10	28	0.85	22	2.0
OBM 5/16	6625	0(1)	0	0.156	4	5/16-24	KOM	1.53	39	1.17	30	0.85	22	2.0
1M	6626	0(1)	0	0.250	6	1 JT(2)	K1M	1.92	49	1.54	39	1.12	28	5.0
1BM 5/16	6627	0(1)	0	0.250	6	5/16-24	K1M	1.95	50	1.57	40	1.12	28	5.0
1BM 3/8	6628	0(1)	0	0.250	6	3/8-24	K1M	1.95	50	1.57	40	1.12	28	5.0

(1) Minimum capacity will hold a No. 70 (.028in /.711mm) drill.
(2) Jacobs® Taper

Drain Chuck

- Specifically designed for use with flexible coil spring tools. Allows coil spring to pass through chuck. Chuck may be hand tightened to secure coil spring at desired length transmitting tool rotation to shaft.
- Ideal for soil pipe and sewer cleaning tools.

MADE IN USA

Model No.	Part No.	Capacity Range Minimum in	Capacity Range Minimum mm	Capacity Range Maximum in	Capacity Range Maximum mm	Mount Thread	Dimensions Closed Length in	Dimensions Closed Length mm	Dimensions Open Length in	Dimensions Open Length mm	Dimensions Sleeve Dia. in	Dimensions Sleeve Dia. mm	Weight Ea. oz
DC4595	30726	0.25	6.4	0.500	13	13/16-20	2.49	63.2	2.49	63.2	1.70	43.2	4.5

Jacobs®

CHUCK KEYS AND ACCESSORIES

Comprehensive selection of Jacobs® precision crafted keys meet any need. Choice of models with nickel thumb grips, "T" handles plus self ejecting keys.

Chuck Keys

T-Handle

L-Handle

Thumb Handle

- Nickel thumb grip styles increase leverage and user comfort.
- Soft steel handles limit the potential for dangerous fracturing under excessive load.
- Self-ejecting models with spring-loaded ejectors ensure key disengagement after tightening.

Model No.	Part No.	Pilot Size in	Used On
K0* (1)	3637	1/8	0 Series
K0M (1)	3639	1/8	0 Series Stainless
K1* (1)	3641	5/32	1 Series
K1M (1)	3643	5/32	1 Series Stainless
K2* (3)	3649	1/4	2 Series
K3* (3)	3651	5/16	3, 34 Serries & 14N
K3C (3)	3653	5/16	34-33 C
K4* (3)	3655	3/8	36, 16, 18N
K5 (1)	3657	7/16	20N
K7* (3)	3659	7/32	7 Series
K30* (3)	3664	15/64	31 Series & 8-1/2N
K32* (3)	3666	1/4	32,33 Series & 11N
KK (1)	30052	9/32	DC8, SM8, 74K, 22BA, 23BA, 24BA, 26BA, 29-33
KKA (2)	3606	9/32	DC8, SM8, 74K, 22BA, 23BA, 24BA, 26BA, 29-33
KG† (1)	3548	1/4	1/4" & 3/8" Multi-Craft®
KG1 (1)	14273	1/4	1/4" & 3/8" Multi-Craft® (black handle)
KGA (2)	3605	1/4	1/4" & 3/8" Multi-Craft®

* Must be ordered in multiples of 20 keys.
† Available only until existing inventory is depleted.
(1) - T-Handle (2) - L-Handle (3) - Thumb Handle

Self-Ejecting Keys

Model No.	Part No.	Pilot Size in	Used On
S-K3C	2948	5/16	3, 34 Series & 14N
S-K32C	2950	1/4	32, 33 Series & 11N
S-KK	3157	9/32	DC8, SM8, 74K, 22BA, 23BA, 24BA, 26BA, 29-33

Accessories

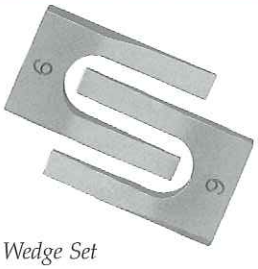

Wedge Set

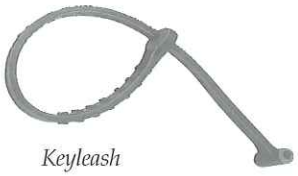

Keyleash

Wedge Sets

- For removing taper mount chucks from arbors or chucks.

Set* No.	Part No.	Used On Jacobs® Taper No.
#1 Wedge Set	13266	1JT
#2 Wedge Set	13267	2JT
#3 Wedge Set	13268	3JT
#6 Wedge Set	13269	6JT

* Removal of Jacobs® tapers No. 4 and No. 5 requires stacking of No. 3 and No. 6 wedge sets.

Keyleashes

Model No.	Part No.	Fits Key No.
Model A	3685	K0, K1, K7, KG
Model B	3686	K30, K32, K2, KK
Model C	3687	K3

CAUTIONS:

1. Never apply extensions, pliers, wrenches or "cheaters" of any kind to chuck key handles.
2. Do not subject chuck key handles to hammer or other impact blows.

Jacobs®

FOR A BETTER GRIP ON PRECISION®

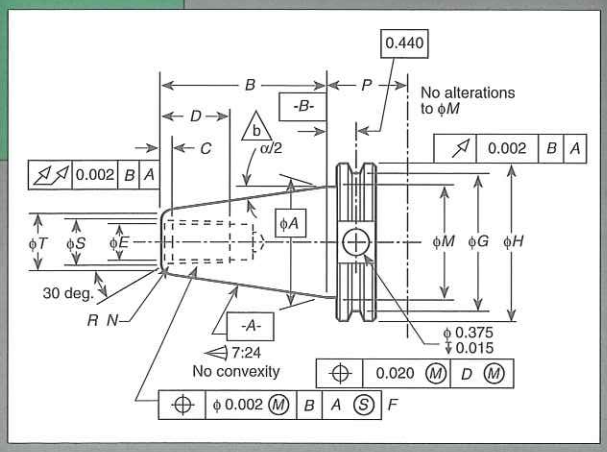

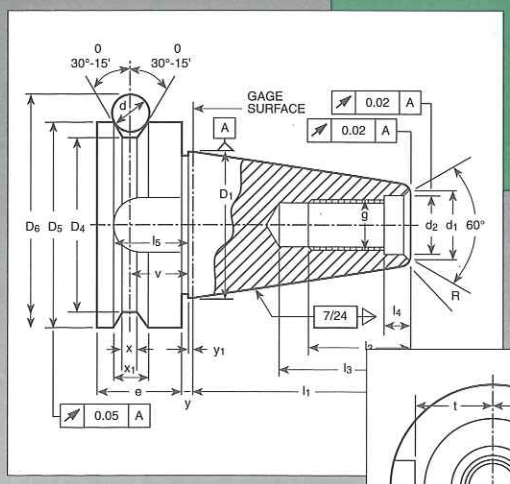

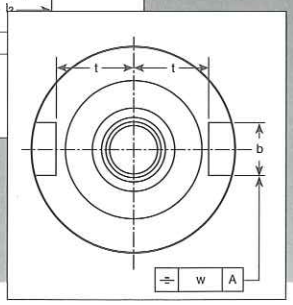

TECHNICAL INFORMATION

Mount Specifications
Taper Specifications
Tool Shank Standards

JACOBS® TAPERS AND MOUNTS

The tables below reproduce and classify the normal dimensions of Jacobs® tapers and mounts. They also observe the generally accepted designations. In effect, the range of increasing values for diameter D contains two No. 2 tapers, the first of which is a No. 2 short taper. Between the tapers 2 and 3, there are two interpolated tapers which bear the out-of-series numbers 33 and 6 respectively.

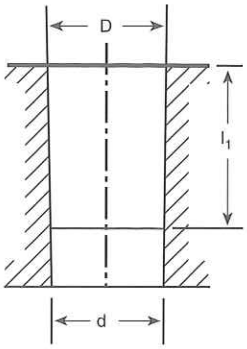

Jacobs Taper No.	D		d		l_1		Taper on Diameter	
	in.	mm	in.	mm	in.	mm	in.	mm
0	0.250 0	6.350	0.228 4	5.802	0.437 50	11.112	0.591 45	0.049 29
1	0.384 0	9.754	0.333 4	8.469	0.656 25	16.669	0.925 08	0.077 09
2 short	0.548 8	13.940	0.487 6	12.386	0.750 00	19.050	0.978 61	0.081 55
2	0.559 0	14.199	0.487 6	12.386	0.875 00	22.225	0.978 61	0.081 55
33	0.624 0	15.850	0.560 5	14.237	1.000 00	25.400	0.761 94	0.063 50
6	0.676 0	17.170	0.624 1	15.852	1.000 00	25.400	0.622 92	0.051 91
3	0.811 0	20.599	0.746 1	18.951	1.218 75	30.956	0.638 98	0.053 25
4	1.124 0	28.550	1.037 2	26.346	1.656 25	42.069	0.628 86	0.052 40
5	1.413 0	35.890	1.316 1	33.422	1.875 00	47.625	0.620 10	0.051 83

Jacobs® Standard Threaded Mounts

5/16 - 24

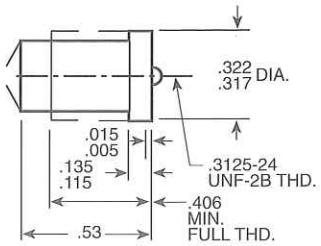

3/8 - 24

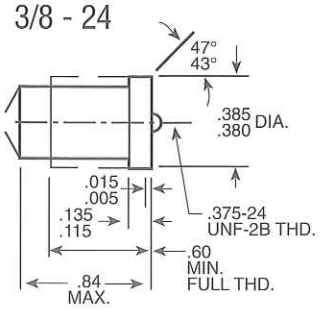

1/2 - 20

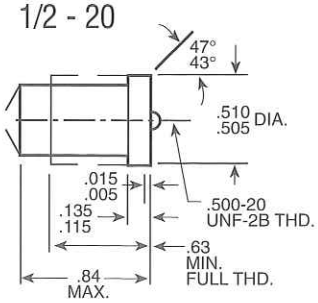

5/8 - 16

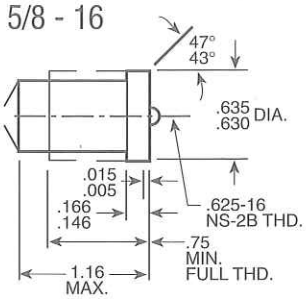

3/4 - 16

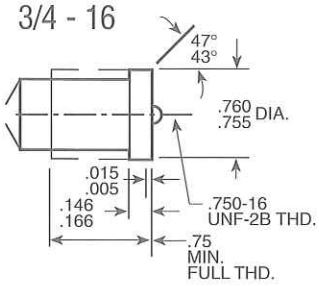

Jacobs® Standard Straight Mount

.625STR

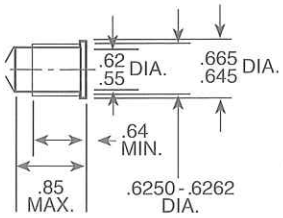

NOTE:
All dimensions are in inches unless otherwise specified.

CAUTION:
When designing for new applications, contact the Engineering Department, The Jacobs® Chuck Manufacturing Company for current specifications.

DIN TAPERS

DIN Taper Interchangeability

DIN tapered sections are identical with the following Morse tapers:

No. 1, for tapers B10 and B12

No. 2, for tapers B16 and B18

No. 3, for tapers B22 and B24

The length of each of these tapers is, of course, distinctly less than the overall length of the corresponding Morse taper. Each taper may be regarded as corresponding approximately either to that part of the Morse taper nearest the small end (for example: B10), or to the part nearest the large end (for example: B12).

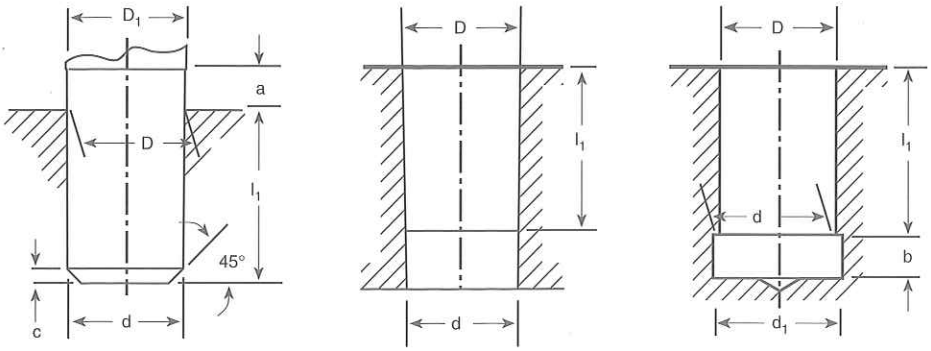

Ref.	D		D_1*		d*		d_1		l_1		a (max.)		b		c		Morse	Taper on Diameter	
No.	in.	mm	in.	mm	in.	mm	in.	mm	in.	mm	in.	mm	in.	mm	in.	mm	No.	in.	mm
B10	0.397 4	10.094	0.403 6	10.3	0.368 9	9.4	25/64	9.8	0.571	14.5	0.125	3.5	0.125	3.5	0.047	1.0	1	0.049 88	0.049 88
B12	0.475 0	12.065	0.481 2	12.2	0.438 7	11.1	29/64	11.5	0.728	18.5	0.125	3.5	0.125	3.5	0.047	1.0	1	0.049 88	0.049 88
B16	0.619 4	15.733	0.628 8	16.0	0.572 2	14.5	19/32	15.0	0.945	24.0	0.188	5.0	0.156	4.0	0.063	1.5	2	0.049 95	0.049 95
B18	0.700 0	17.780	0.709 4	18.0	0.637 1	16.2	21/32	16.8	1.260	32.0	0.188	5.0	0.156	4.0	0.063	1.5	2	0.049 95	0.049 95
B22	0.858 0	21.793	0.867 4	22.0	0.778 0	19.8	13/16	20.5	1.594	40.5	0.188	5.0	0.188	4.5	0.078	2.0	3	0.050 20	0.050 20
B24	0.938 0	23.825	0.947 4	24.1	0.838 2	21.3	7/8	22.0	1.988	50.5	0.188	5.0	0.188	4.5	0.078	2.0	3	0.050 20	0.050 20

NOTES:

* D_1 and d = calculated values given for information.

The effective values are obtained by applying the rate of taper and the basic dimension D to the actual values of a and l_1, respectively.

MORSE TAPERS

Nos. 1 to 6 and 5% Metric

External Taper with Tang

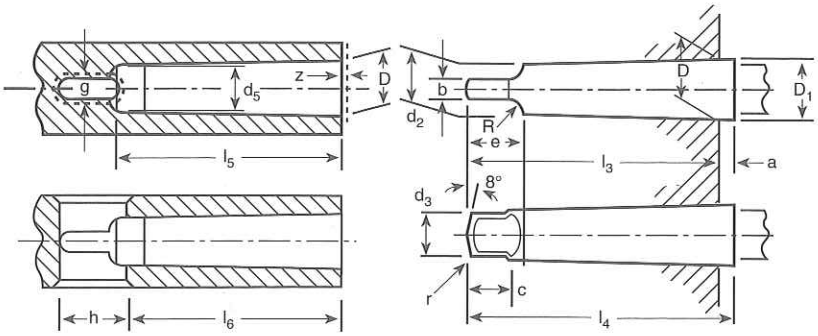

External Taper with Tapped Hole

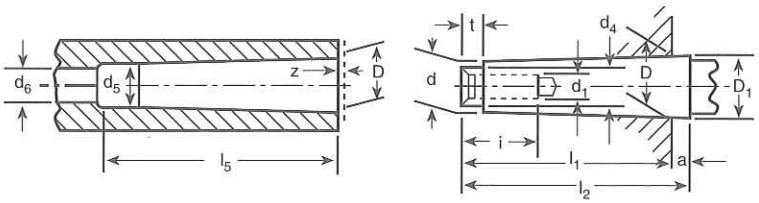

NOTE: All dimensions are in millimeters unless otherwise specified.

Designation		Metric Taper		Morse Taper						Metric Taper				
		4	6	1	2	3	4	5	6	80	100	120	160	200
Basic Size	Taper	1:20 = 0.05		0.598 58:12 = 1:20.047 = 0.049 88	0.599 41:12 = 1:20.020 = 0.049 95	0.602 35:12 = 1:19.922 = 0.050 20	0.623 26:12 = 1:19.254 =0.051 94	0.631 51:12 = 1:19.002 =0.052 63	0.625 65:12 = 1:19.180 = 0.052 14	1:20 = 0.05				
External Taper	D	4	6	12.065	17.780	23.825	31.267	44.399	63.348	80	100	120	160	200
	a	2	3	3.5	5	5	6.5	6.5	8	8	10	12	16	20
	D_1 (1)	4.1	6.2	12.2	18	24.1	31.6	44.7	63.8	80.4	100.5	120.6	160.8	201
	d (1)	2.9	4.4	9.4	14.6	19.8	25.9	37.6	53.9	70.2	88.4	106.6	143	179.4
	d_1 (2)	—	—	M6	M10	M12	M16	M20	M24	M30	M36	M36	M48	M48
	d_2 (1)	—	—	9	14	19.1	25.2	36.5	52.4	69	87	105	141	177
	d_3 max.	—	—	8.7	13.5	18.5	24.5	35.7	51	67	85	102	138	174
	d_4 max.	2.5	4	9	14	19	25	35.7	51	67	85	102	138	174
	l_1 max.	23	32	53.5	64	81	102.5	129.5	182	196	232	268	340	412
	l_2 max.	25	35	57	69	86	109	136	190	204	242	280	356	432
	l_3 max.	—	—	62	75	94	117.5	149.5	210	220	260	300	380	460
	l_4 max.	—	—	65.5	80	99	124	156	218	228	270	312	396	480
	b h13	—	—	5.2	6.3	7.9	11.9	15.9	19	26	32	38	50	62
	c (3)	—	—	8.5	10	13	16	19	27	24	28	32	40	48
	e max.	—	—	13.5	16	20	24	29	40	48	58	68	88	108
	i min.	—	—	16	24	28	32	40	50	65	80	80	100	100
	R max.	—	—	5	6	7	8	10	13	24	30	36	48	60
	r	—	—	1.2	1.6	2	2.5	3	4	5	5	6	8	10
	t max.	2	3	5	5	7	9	10	16	24	30	36	48	60
Internal Taper	d_5 H11	3	4.6	9.7	14.9	20.2	26.5	38.2	54.6	71.5	90	108.5	145.5	182.5
	d_6	—	—	7	11.5	14	18	23	27	33	39	39	52	52
	l_5 min.	25	34	56	67	84	107	135	188	202	240	276	350	424
	l_6	21	29	52	62	78	98	125	177	186	220	254	321	388
	g A13	2.2	3.2	5.2	6.3	7.9	11.9	15.9	19	26	32	38	50	62
	h	8	12	19	22	27	32	38	47	52	60	70	90	110
	z (4)	0.5	0.5	1	1	1	1.5	1.5	2	2	2	2	3	3

NOTES:

1. D_1 and d or d_2 = approximate values given for guidance. The actual values result from the actual values of a and l_1 or l_3 respectively, taking into account the taper and the basic size D.
2. d_1 = thread diameter: either a metric thread M with standard pitch or, if expressly stated, a UNC thread. In every case, the appropriate symbol M or UNC shall be marked on the component.
3. It is allowed to increase the length c over which the tang is turned to diameter d_3, but without exceeding e.
4. z = maximum permissible deviation, outwards only, of the position of the gage plane D from the nominal position of coincidence with the leading face.

MORSE TAPERS

Nos. 1 to 6

External Taper with Tang

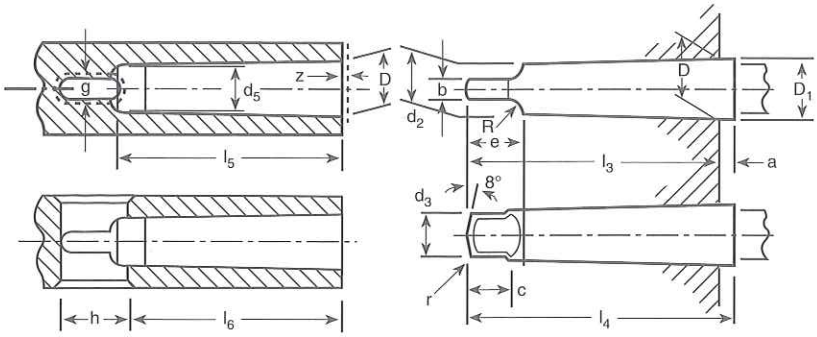

External Taper with Tapped Hole

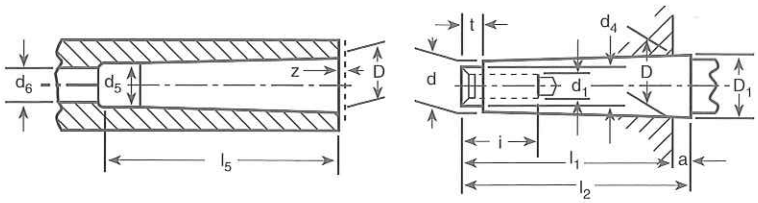

NOTE: All dimensions are in inches unless otherwise specified.

Designation		Morse Taper					
		1	2	3	4	5	6
Basic Size	Taper	0.598 58:12 = 1:20.047 = 0.049 88	0.599 41:12 = 1:20.020 = 0.049 95	0.602 35:12 = 1:19.922 = 0.050 20	0.623 26:12 = 1:19.254 = 0.051 94	0.631 51:12 = 1:19.002 = 0.052 63	0.625 65:12 = 1:19.180 = 0.052 14
External Taper	D	0.475	0.700	0.938	1.231	1.748	2.494
	a	1/8	3/16	3/16	1/4	1/4	5/16
	D_1 (1)	0.481 2	0.709 4	0.947 4	1.244 0	1.761 2	2.510 3
	d (1)	0.369 0	0.572 0	0.778 0	1.020 0	1.475 0	2.116 0
	d_1 (2)	UNC 1/4	UNC 3/8	UNC 1/2	UNC 5/8	UNC 5/8	UNC 1
	d_2 (1)	0.353 4	0.553 3	0.752 9	0.990 8	1.438 8	2.063 9
	d_3 max.	11/32	17/32	23/32	31/32	1-13/32	2
	d_4 max.	11/32	17/32	23/32	31/32	1-13/32	2
	l_1 max.	2-1/8	2-9/16	3-3/16	4-1/16	5-3/16	7-1/4
	l_2 max.	2-1/4	2-3/4	3-3/8	4-5/16	5-7/16	7-9/16
	l_3 max.	2-7/16	2-15/16	3-11/16	4-5/8	5-7/8	8-1/4
	l_4 max.	2-9/16	3-1/8	3-7/8	4-7/8	6-1/8	8-9/16
	b h12	0.203 1	0.250 0	0.312 5	0.468 7	0.625 0	0.750 0
	c (3)	11/32	13/32	17/32	5/8	3/4	1-1/16
	e max.	0.52	0.66	0.83	0.96	1.15	1.58
	i min.	1/2	3/4	1	1-1/4	1-1/4	2
	R max.	3/16	1/4	9/32	5/16	3/8	1/2
	r	3/64	1/16	5/64	3/32	1/8	5/32
	t max.	3/16	3/16	1/4	1/4	5/16	3/8
Internal Taper	d_5 H11	0.378	0.588	0.797	1.044	1.502	2.150
	d_6	9/32	7/16	9/16	11/16	11/16	1-1/8
	l_5 min.	2-3/16	2-21/32	3-9/32	4-5/32	5-5/16	7-3/8
	l_6	2-1/16	2-1/2	3-1/16	3-7/8	4-15/16	7
	g H12	0.223	0.270	0.333	0.493	0.650	0.780
	h	3/4	7/8	1-1/8	1-1/4	1-1/2	1-7/8
	z (4)	0.040	0.040	0.040	0.060	0.060	0.080

NOTES:

1. D_1 and d or d_2 = approximate values given for guidance. The actual values result from the actual values of a and l or l_3 respectively, taking into account the taper and the basic size D.
2. d_1 = thread diameter: either a UNC thread or, if expressly stated, a metric thread M with standard pitch. In every case, the appropriate symbol UNC or M shall be marked on the component.
3. It is allowed to increase the length c over which the tang is turned to diameter d_3, but without exceeding e.
4. z = maximum permissible deviation, outwards only, of the position of the gage plane D from the nominal position of coincidence with the leading face.

TOOL SHANK STANDARDS

ANSI/ASME B5.50 - 1994

V-Flange

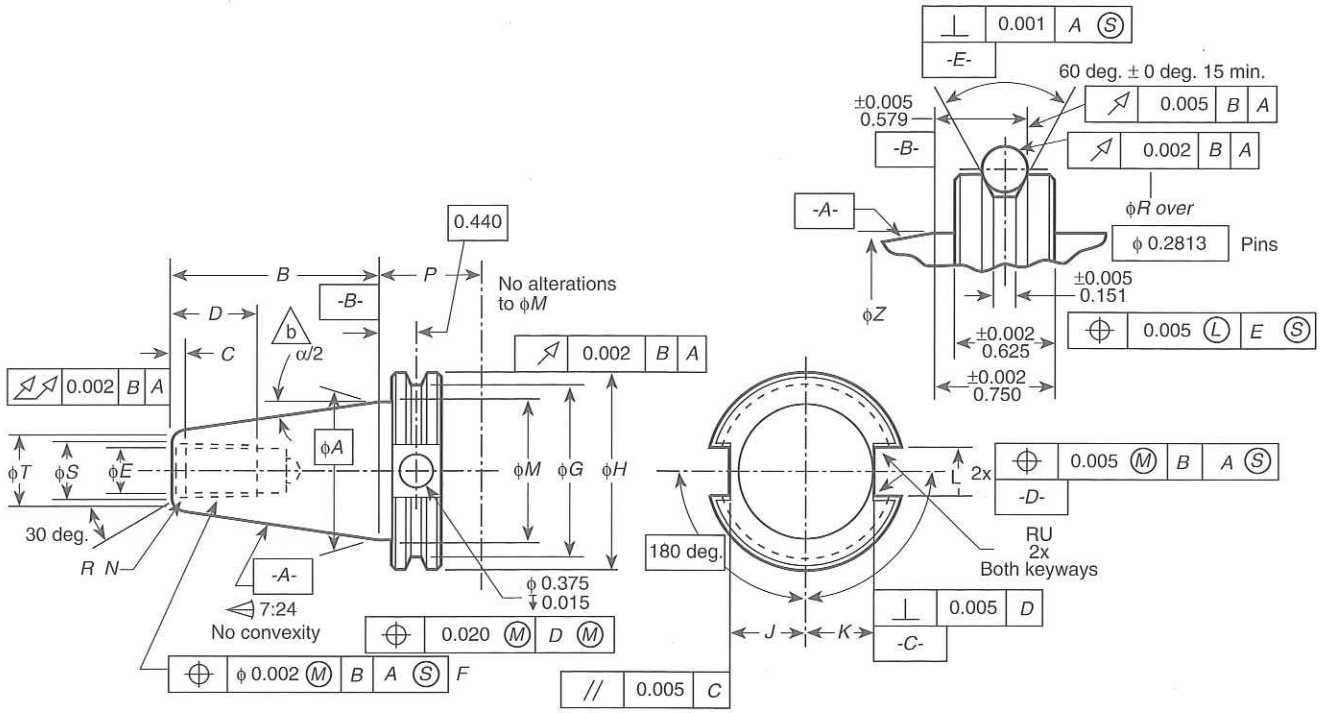

NOTE: All dimensions are in inches unless otherwise specified.

Tols. / Size	⌀A Gage Dia.	B ±0.005	C ±0.010	D Min.	⌀E +0.015 -0.000	F UNC 2B	⌀G ±0.010	⌀H ±0.002	J 0.000 -0.015	K +0.000 -0.015	L ±0.010	⌀M ±0.005	N	P Min.	⌀R ±0.002	⌀S ±0.010	⌀T Min. Flat	U ±0.0010	⌀Z +0.000 ±0.005
30	1.250	1.875	0.188	1.00	0.516	0.500-13	1.531	1.812	0.735	0.640	0.645	1.250	0.015 0.030	1.38	2.176	0.590	0.650	.030	1.250
40	1.750	2.687	0.188	1.12	0.641	0.625-11	2.219	2.500	0.985	0.890	0.645	1.750	0.045 0.060	1.38	2.863	0.720	0.860	.030	1.750
45	2.250	3.250	0.188	1.50	0.766	0.750-10	2.969	3.250	1.235	1.140	0.770	2.250	0.075 0.090	1.38	3.613	0.850	1.090	.030	2.250
50	2.750	4.000	0.250	1.75	1.031	1.000-8	3.594	3.875	1.485	1.390	1.020	2.750	0.075 0.090	1.38	4.238	1.125	1.380	.030	2.750
60	4.250	6.375	0.312	2.25	1.281	1.250-7	5.219	5.500	2.235	2.140	1.020	4.250	0.120 0.200	1.50	5.683	1.375	2.040	0.40	4.250

GENERAL NOTES:

(*a*) Taper cone tolerance is in accordance with ISO-1947.

(△b) Standard cone angle tolerance grade is to be AT-4.

(*c*) Geometric dimension symbols are in accordance with ANSI Y14.5M-1982.

(*d*) Deburr all sharp edges.

(△e) All unspecified fillets and radii: R 0.03 ±0.010 or 0.03 ±0.010 x 45 deg.

TOOL SHANK STANDARDS

JMTBA MAS403-1982

BT Tapered Shank

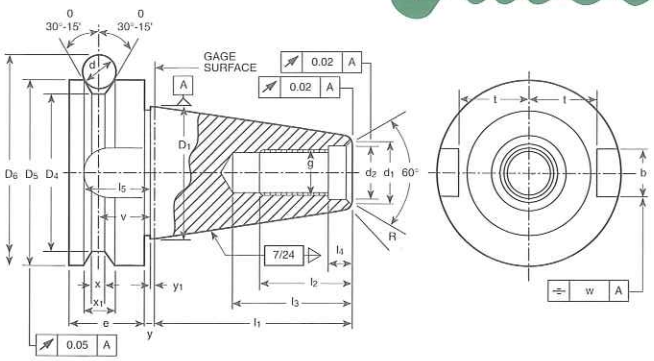

NOTE: All dimensions are in millimeters unless otherwise specified.

Serial No.	Shank D_1	Shank l_1 ±0.2	Shank R (max)	Screw d_1	Screw d_2 H8	Screw g 6H	Screw l_2 (min)	Screw l_3 (min)	Screw l_4 +0.5 0	Tang b H12	Tang l_5 (min)	Tang t 0 -0.2	Tang w
BT30	31.75	48.4	0.5	14	12.5	M12	24	34	7.0	16.1	17	16.3	0.12
BT35	38.10	56.4	0.5	14	12.5	M12	24	34	7.0	16.1	20	19.6	0.12
BT40	44.45	65.4	1	19	17	M16	30	43	9.0	16.1	21	22.6	0.12
BT45	57.15	82.8	1	23	21	M20	38	53	11.0	19.3	26	29.1	0.12
BT50	69.85	101.8	1	27	25	M24	45	62	13.0	25.7	31	35.4	0.20
BT55	88.90	126.8	1	33	31	M30	56	76	16.0	25.7	31	45.1	0.20
BT60	107.95	161.8	1	33	31	M30	56	76	16.0	25.7	34	60.1	0.20

Serial No.	Flange D_4	Flange D_5 h8	Flange e	Flange v ±0.1	Flange x	Flange x_1 0.1 0	Flange y ±0.4	Flange y_1 0 -0.4	7/24 Taper Angle Tolerance (1) ATD	Reference Small End Diam.	Reference d	Reference D_6
BT30	38	46	20	13.6	4	8	2	2	+0.0039/-0	17.633	8	56.144
BT35	43	53	22	14.6	5	10	2	2	+0.0045/-0	21.650	10	65.680
BT40	53	63	25	16.6	5	10	2	2	+0.0041/-0	25.375	10	75.679
BT45	73	85	30	21.2	6	12	3	3	+0.0052/-0	33.000	12	100.216
BT50	85	100	35	23.2	7	15	3	3	+0.0051/-0	40.158	15	119.020
BT55	107	120	40	26.2	9	18	3	3	+0.0063/-0	51.917	18	147.823
BT60	135	155	45	28.2	11	20	3	3	+0.0065/-0	60.758	20	180.359

Retention Knobs

ANSI/ASME B5.50-1994 — Essential Dimensions

Tols. / Size	A UNC 2A	B ±0.005	C ±0.005	D ±0.040	E ±0.005	F ±0.005	G ±0.010	H ±0.010	J ±0.010	K	L +0.000 -0.010	M ±0.040	R +0.010 -0.005
30	0.500 -13	0.520	0.385	1.10	0.460	0.320	0.04	0.10	0.187	0.65 0.64	0.53	0.19	0.094
40	0.625 -11	0.740	0.490	1.50	0.640	0.440	0.06	0.12	0.281	0.94 0.92	0.75	0.22	0.094
45	0.750 -10	0.940	0.605	1.80	0.820	0.580	0.08	0.16	0.375	1.20 1.18	1.00	0.22	0.094
50	1.000 -8	1.140	0.820	2.30	1.000	0.700	0.10	0.20	0.468	1.44 1.42	1.25	0.25	0.125
60	1.250 -7	1.460	1.045	3.20	1.500	1.080	0.14	0.30	0.500	2.14 2.06	1.50	0.31	0.125

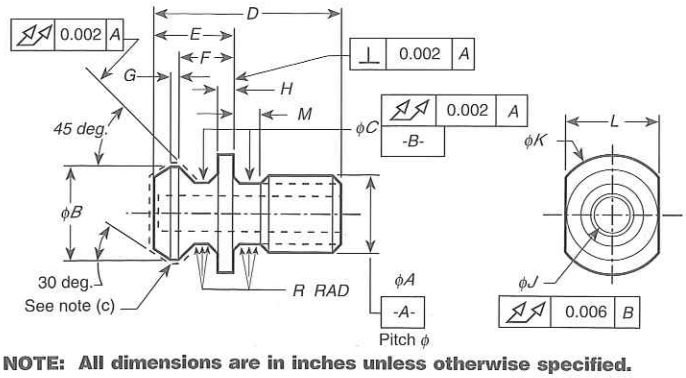

NOTE: All dimensions are in inches unless otherwise specified.

NOTES:

1. Material: low carbon alloy steel.
2. Heat treatment: carburize and harden to 0.016 to 0.028 in. effective case.
3. Hardness to be RC 56-60 on surfaces indicated by a chain dotted line: core hardness RC 35-45.
4. "J" hole shall not be carburized.
5. "C" and "R" must be free of tool marks.
6. Deburr all sharp edges.
7. Geometric dimension symbols are in accordance with ANSI Y14.5M-1982.
8. The Jacobs® Chuck Manufacturing Co. does not sell retention knobs, but will recommend sources.

MOUNTING AND REMOVING CHUCKS

On Threaded Spindle Portable Tools

To mount chucks:

Thread chuck on the spindle by hand so that the back of the chuck seats firmly against the mounting surface provided on the portable tool spindle.

To remove chucks:

Chucks with threaded mounts can be identified by the letters "B" or "BA" in the model number (1B, 41BA). "BA" model chucks may have a left hand thread retaining screw through the chuck body into the tool spindle. Remove retaining screw through the chuck jaw hole opening, turn screw clockwise and proceed as described for "B" model chucks. "B" model chucks may be removed from a threaded spindle by tightening the chuck jaws around a hex key and striking the key with a sharp blow in a counter-clockwise direction, using a wooden or rubber hammer (Illus. A).

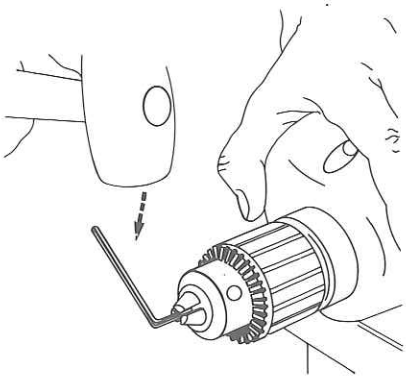

Illus. A

On Tapered Spindles

To mount chucks:

Clean both tapers of all grease and grit. With the chuck jaws completely retracted into the chuck and using a thin piece of wood to protect the chuck nose, tap the chuck into place on the spindle.

To remove chucks:

If a power tool has a tapered spindle, the chuck may be removed from the spindle by inserting chuck removal wedges between the chuck back and the spindle housing (Illus. B).

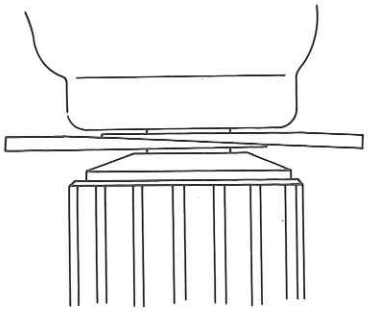

Illus. B

On Tapered Shank Arbors

To mount chucks:

Clean both tapers as above. With the jaws retracted into the chuck and with the chuck nose resting on a wooden bench, strike the tang of the arbor lightly to seat it into the chuck. Do NOT assemble on an arbor press as excessive pressure will expand the chuck body and distort the chuck jaw holes.

To remove chucks:

Insert wedges between the back of the chuck and the shoulder of the arbor (Illus. C). In case the mounting taper of the arbor does not provide a shoulder, a cross hole should be drilled through the neck of the arbor (Illus. D) and a cross pin inserted. Then the wedges can be used between the chuck back and the cross pin. If desired, a hole may be drilled through the soft center portion of the chuck body (Illus. D), and a pin may then be used with an arbor press to force the arbor out of the chuck.

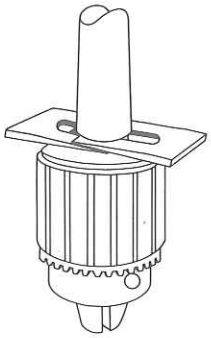

Illus. C

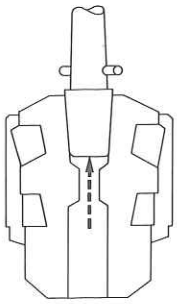

Illus. D

REPAIR INSTRUCTIONS

Disassembly

Plain Bearing Chucks:

Extend the jaws to half capacity, press the sleeve off over front (jaw end) of body, remove the nut halves (Illus. E).

Ball Bearing Chucks:

Extend the jaws to half capacity, press the sleeve off over front (jaw end) of body, remove the nut halves, jaws, bearing race, and thrust washer (Illus. E).

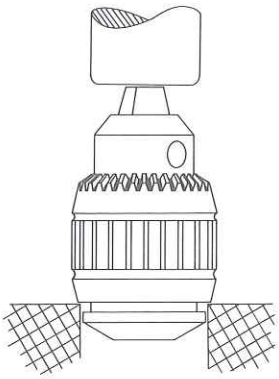

Illus. E

Assembly

CAUTION: Each of the three jaws differ slightly from the other by the location of the threaded portion (Illus. G). In order to ensure proper operation, they must be re-installed in the proper sequence.

Plain Bearing Chucks:

Refer to Illus. G and insert the jaws in the correct sequence when viewing the chuck from the body nose diameter. Insert No. 1 jaw (with small step) first, then No. 2 jaw (with largest step) in the clockwise position, then No. 3 jaw (without a step) should be inserted.

Turn chuck jaws to closed position and check to ensure that all three jaws are properly aligned. The height of all three jaws should be uniform.

A good grade of grease should be applied to the jaw and nut threads, then the nut halves should be closed around the jaws. Extend jaws to half capacity. Press on the sleeve with an arbor press (Illus. F).

Ball Bearing Chucks:

Slip the thrust race over jaw end of the body until it contacts the rear flange. Slip the caged bearing over jaw end of the body until it contacts the thrust race.

Follow Plain Bearing jaw assembly and nut procedure.

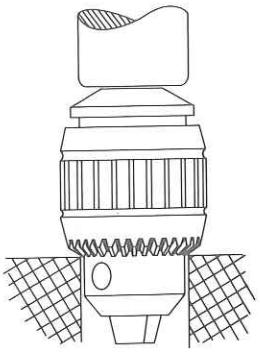

Illus. F

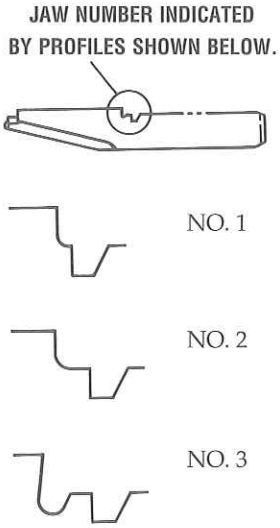

Illus. G - Jaw Identification

Jacobs®

BY MODEL NUMBER

Jacobs®

BY PART NUMBER

DECIMAL EQUIVALENT CHART

Jacobs®

Drill Size	Decimal Inches
0.30mm	0.0118
0.32mm	0.0126
80	0.0135
0.35mm	0.0138
79	0.0145
0.38mm	0.0150
1/64	0.0156
0.40mm	0.0157
78	0.0160
0.42mm	0.0165
0.45mm	0.0177
77	0.0180
0.48mm	0.0189
0.50mm	0.0197
76	0.0200
75	0.0210
0.55mm	0.0217
74	0.0225
0.60mm	0.0236
73	0.0240
0.62mm	0.0244
72	0.0250
0.65mm	0.0256
71	0.0260
0.70mm	0.0276
70	0.0280
69	0.0292
0.75mm	0.0295
68	0.0310
1/32	0.0312
0.80mm	0.0315
67	0.0320
66	0.0330
0.85mm	0.0335
65	0.0350
0.90mm	0.0354
64	0.0360
63	0.0370
0.95mm	0.0374
62	0.0380
61	0.0390
1.00mm	0.0394
60	0.0400
59	0.0410
1.05mm	0.0413
58	0.0420
57	0.0430
1.10mm	0.0433
1.15mm	0.0453
56	0.0465
3/64	0.0469
1.20mm	0.0472
1.25mm	0.0492
1.30mm	0.0512
55	0.0520
1.35mm	0.0531

Drill Size	Decimal Inches
54	0.0550
1.40mm	0.0551
1.45mm	0.0571
1.50mm	0.0591
53	0.0595
1.55mm	0.0610
1/16	0.0625
1.60mm	0.0630
52	0.0635
1.65mm	0.0650
1.70mm	0.0669
51	0.0670
1.75mm	0.0689
50	0.0700
1.80mm	0.0709
1.85mm	0.0728
49	0.0730
1.90mm	0.0748
48	0.0760
1.95mm	0.0768
5/64	0.0781
47	0.0785
2.00mm	0.0787
2.05mm	0.0807
46	0.0810
45	0.0820
2.10mm	0.0827
2.15mm	0.0846
44	0.0860
2.20mm	0.0866
2.25mm	0.0886
43	0.0890
2.30mm	0.0906
2.35mm	0.0925
42	0.0935
3/32	0.0938
2.40mm	0.0945
41	0.0960
2.45mm	0.0965
40	0.0980
2.50mm	0.0984
39	0.0995
38	0.1015
2.60mm	0.1024
37	0.1040
2.70mm	0.1063
36	0.1065
7/64	0.1094
35	0.1100
2.80mm	0.1102
34	0.1110
33	0.1130
2.90mm	0.1142
32	0.1160
3.00mm	0.1181
31	0.1200

Drill Size	Decimal Inches
3.10mm	0.1220
1/8	0.1250
3.20mm	0.1260
30	0.1285
3.30mm	0.1299
3.40mm	0.1339
29	0.1360
3.50mm	0.1378
28	0.1405
9/64	0.1406
3.60mm	0.1417
27	0.1440
3.70mm	0.1457
26	0.1470
25	0.1495
3.80mm	0.1496
24	0.1520
3.90mm	0.1535
23	0.1540
5/32	0.1562
22	0.1570
4.00mm	0.1575
21	0.1590
20	0.1610
4.10mm	0.1614
4.20mm	0.1654
19	0.1660
4.30mm	0.1693
18	0.1695
11/64	0.1719
17	0.1730
4.40mm	0.1732
16	0.1770
4.50mm	0.1772
15	0.1800
4.60mm	0.1811
14	0.1820
4.70 **13**	0.1850
3/16	0.1875
4.80 **12**	0.1890
11	0.1910
4.90mm	0.1929
10	0.1935
9	0.1960
5.00mm	0.1969
8	0.1990
5.10mm	0.2008
7	0.2010
13/64	0.2031
6	0.2040
5.20mm	0.2047
5	0.2055
5.30mm	0.2087
4	0.2090
5.40mm	0.2126
3	0.2130

Drill Size	Decimal Inches
5.50mm	0.2165
7/32	0.2188
5.60mm	0.2205
2	0.2210
5.70mm	0.2244
1	0.2280
5.80mm	0.2283
5.90mm	0.2323
A	0.2340
15/64	0.2344
6.00mm	0.2362
B	0.2380
6.10mm	0.2402
C	0.2420
6.20mm	0.2441
D	0.2460
6.30mm	0.2480
1/4, E	0.2500
6.40mm	0.2520
6.50mm	0.2559
F	0.2570
6.60mm	0.2598
G	0.2610
6.70mm	0.2638
17/64	0.2656
H	0.2660
6.80mm	0.2677
6.90mm	0.2717
I	0.2720
7.00mm	0.2756
J	0.2770
7.10mm	0.2795
K	0.2810
9/32	0.2812
7.20mm	0.2835
7.30mm	0.2874
L	0.2900
7.40mm	0.2913
M	0.2950
7.50mm	0.2953
19/64	0.2969
7.60mm	0.2992
N	0.3020
7.70mm	0.3031
7.80mm	0.3071
7.90mm	0.3110
5/16	0.3125
8.00mm	0.3150
O	0.3160
8.10mm	0.3189
8.20mm	0.3228
P	0.3230
8.30mm	0.3268
21/64	0.3281
8.40mm	0.3307
Q	0.3320

Drill Size	Decimal Inches
8.50mm	0.3346
8.60mm	0.3386
R	0.3390
8.70mm	0.3425
11/32	0.3438
8.80mm	0.3465
S	0.3480
8.90mm	0.3504
9.00mm	0.3543
T	0.3580
9.10mm	0.3583
23/64	0.3594
9.20mm	0.3622
9.30mm	0.3661
U	0.3680
9.40mm	0.3701
9.50mm	0.3740
3/8	0.3750
V	0.3770
9.60mm	0.3780
9.70mm	0.3819
9.80mm	0.3858
W	0.3860
9.90mm	0.3898
25/64	0.3906
10.00mm	0.3937
X	0.3970
10.20mm	0.4016
Y	0.4040
13/32	0.4062
Z	0.4130
10.50mm	0.4134
27/64	0.4219
10.80mm	0.4252
11.00mm	0.4331
7/16	0.4375
11.20mm	0.4409
11.50mm	0.4528
29/64	0.4531
11.80mm	0.4646
15/32	0.4688
12.00mm	0.4724
12.20mm	0.4803
31/64	0.4844
12.50mm	0.4921
1/2	0.5000
12.80mm	0.5039
13.00mm	0.5118
33/64	0.5156
13.20mm	0.5197
17/32	0.5312
13.50mm	0.5315
13.80mm	0.5433
35/64	0.5469
14.00mm	0.5512
14.25mm	0.5610

Drill Size	Decimal Inches
9/16	0.5625
14.50mm	0.5709
37/64	0.5781
14.75mm	0.5807
15.00mm	0.5906
19/32	0.5938
15.25mm	0.6004
39/64	0.6094
15.50mm	0.6102
15.75mm	0.6201
5/8	0.6250
16.00mm	0.6299
16.25mm	0.6398
41/64	0.6406
16.50mm	0.6496
21/32	0.6562
16.75mm	0.6594
17.00mm	0.6693
43/64	0.6719
17.25mm	0.6791
11/16	0.6875
17.50mm	0.6890
45/64	0.7031
18.00mm	0.7087
23/32	0.7188
18.50mm	0.7283
47/64	0.7344
19.00mm	0.7480
3/4	0.7500
49/64	0.7656
19.50mm	0.7677
25/32	0.7812
20.00mm	0.7874
51/64	0.7969
20.50mm	0.8071
13/16	0.8125
21.00mm	0.8268
53/64	0.8281
27/32	0.8438
21.50mm	0.8465
55/64	0.8594
22.00mm	0.8661
7/8	0.8750
22.50mm	0.8858
57/64	0.8906
23.00mm	0.9055
29/32	0.9062
59/64	0.9219
23.50mm	0.9252
15/16	0.9375
24.00mm	0.9449
61/64	0.9531
24.50mm	0.9646
31/32	0.9688
25.00mm	0.9843
63/64	0.9844
1″	1.0000

Jacobs® chucks, chuck keys, toolholders, work holders and accessories, manufactured or distributed by The Jacobs® Chuck Manufacturing Company and the Danaher Tool Group, are warranted to be free from defects in materials or workmanship for one year from the date of purchase.

This warranty applies only to the first person who buys the products directly from a Jacobs® products distributor representative. The Jacobs® Chuck Manufacturing Company and the Danaher Tool Group cannot be responsible for products which have been abused, misused, or modified. This warranty does not apply to any parts, components or accessories not manufactured by The Jacobs® Chuck Manufacturing Company and the Danaher Tool Group.

If a Jacobs® product proves defective within one year after purchase, simply return it to the place from which it was purchased or to the nearest distributor of Jacobs® products, transportation charges prepaid. Enclose your name and address, a short description of the defect and proof of the date of purchase. At its option, The Jacobs® Chuck Manufacturing Company and the Danaher Tool Group will replace the product free of charge or refund the full purchase price if they find the product to be defective. The sole liability of The Jacobs® Chuck Manufacturing Company and the Danaher Tool Group and your exclusive remedy under this Warranty is limited to repair or replacement of the defective product or to a full refund of its purchase price.

There are no other warranties, express or implied, including those of merchantability or fitness for a particular purpose, beyond those described above. In no event shall the liability of The Jacobs® Chuck Manufacturing Company and the Danaher Tool Group exceed the purchase price of the products, nor shall The Jacobs® Chuck Manufacturing Company and the Danaher Tool Group be liable for incidental, consequential, or special damages, costs or expenses, excepting only the cost or expense of repair, replacement or refund as described above.

PLEASE NOTE:

Without notice, The Jacobs® Chuck Manufacturing Company and the Danaher Tool Group reserve the right to change the design, material composition and dimensional specifications for all products offered in this catalog.

Member Of NMTBA The Association For Manufacturing Technology

STAFDA

MEMBER AMTDA American Machine Tool Distributors' Association

Your First Source I·D·A The Industrial Distribution Association

DANAHER TOOL GROUP

Industrial Products Division
805 Estelle Drive
P.O. Box 3767
Lancaster, PA 17604-3767
Phone: 717-898-6540
800-866-5753
Fax: 717-898-8360
800-234-0472

Printed on recycled paper.

Catalog Number 89074-54
Printed in U.S.A.
15M/400/20083